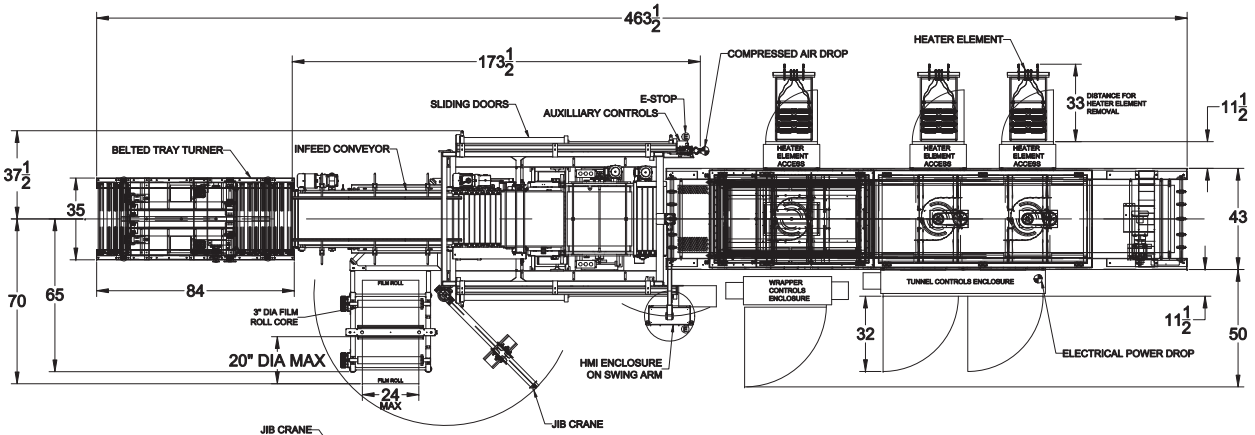

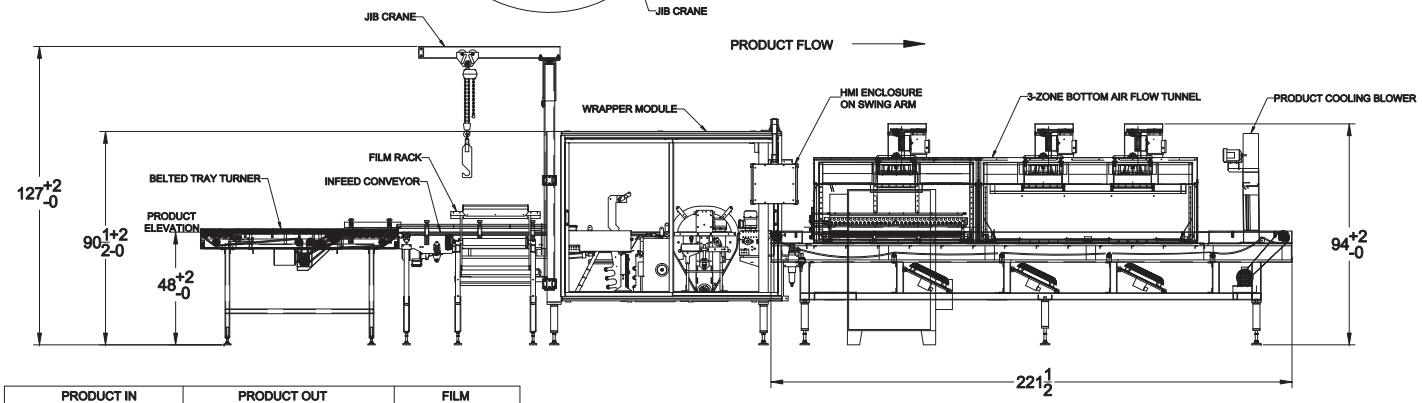

PRODUCT INFORMATION

		PRODUCT IN				PRODUCT OUT				FILM	
PROD #	PRODUCT DESCRIPTION	WIDTH	LENGTH	HT	RATE	PATTERN	WIDTH	LENGTH	RATE	TYPE	CLR/PRNT
1	355 ML 12 COUNT LOOSE	9.04	6.78	6.13	62	1 X 1 X 1	9.04	6.78	62	LDPE	BOTH
2	355 ML 4-PACK CARTON, 6 PER TRAY	13.56	9.04	6.13	34	1 X 1 X 1	13.56	9.04	34	LDPE	BOTH
3	355 ML 6-PACK CARTON, 4 PER TRAY	13.56	9.04	6.13	34	1 X 1 X 1	13.56	9.04	34	LDPE	BOTH
4	355 ML 12-PACK CARTON, 2 PER TRAY	13.56	9.04	6.13	34	1 X 1 X 1	13.56	9.04	34	LDPE	BOTH
5	355 ML 24-PACK CARTON, 1 PER TRAY	13.56	9.04	6.13	62	1 X 1 X 1	13.56	9.04	62	LDPE	BOTH
6	12 OZ 12 COUNT LOOSE	10.40	7.80	4.81	62	1 X 1 X 1	10.40	7.80	62	LDPE	BOTH
7	12 OZ 24 COUNT LOOSE	10.40	15.60	4.81	34	1 X 1 X 1	15.60	10.40	34	LDPE	BOTH
8	12 OZ 4-PACK CARTON, 6 PER TRAY	15.60	10.40	4.81	34	1 X 1 X 1	15.60	10.40	34	LDPE	BOTH
9	12 OZ 6-PACK CARTON, 4 PER TRAY	15.60	10.40	4.81	34	1 X 1 X 1	15.60	10.40	34	LDPE	BOTH
10	12 OZ 12-PACK CARTON, 2 PER TRAY	15.60	10.40	4.81	34	1 X 1 X 1	15.60	10.40	34	LDPE	BOTH
11	12 OZ 24-PACK CARTON, 1 PER TRAY	15.60	10.40	4.81	62	1 X 1 X 1	15.60	10.40	62	LDPE	BOTH
12	16 OZ 12 COUNT LOOSE	10.40	7.80	6.13	62	1 X 1 X 1	10.40	7.80	62	LDPE	BOTH
13	16 OZ 24 COUNT LOOSE	10.40	15.60	6.13	34	1 X 1 X 1	15.60	10.40	34	LDPE	BOTH
14	16 OZ 4-PACK CARTON, 6 PER TRAY	15.60	10.40	6.13	34	1 X 1 X 1	15.60	10.40	34	LDPE	BOTH
15	16 OZ 6-PACK CARTON, 4 PER TRAY	15.60	10.40	6.13	34	1 X 1 X 1	15.60	10.40	34	LDPE	BOTH
16	16 OZ 12-PACK CARTON, 2 PER TRAY	15.60	10.40	6.13	34	1 X 1 X 1	15.60	10.40	34	LDPE	BOTH
17	16 OZ 24-PACK CARTON, 1 PER TRAY	15.60	10.40	6.13	62	1 X 1 X 1	15.60	10.40	62	LDPE	BOTH

ANY PRODUCTS SPECIFIED ABOVE THAT ARE NOT PROVIDED FOR MACHINE SETUP/TESTING AT ARPAC, INCLUDING CONSUMABLES (FILM), WILL REQUIRE ADDITIONAL SETUP/TESTING IN THE FIELD AT THE STANDARD SERVICE AND ENGINEERING RATE.

TECHNICAL INFORMATION:

PRODUCT ELEVATION: 36" +2/-0
ELECTRICAL POWER: 460V 60HZ 3PH, 160 FULL LOAD AMPS
MAIN CIRCUIT BREAKER AMPERAGE: 200A, 5KA SCCR
COMPRESSED AIR: 80 PSI (OPERATING PRESSURE) 30 SCFM
AMBIENT TEMPERATURE LESS THAN 95 DEG F
ARPAC PAINT COLORS: BLACK & SILVER
IP ADDRESS SCHEME: 10.255.255.XXX
PLC FIRMWARE VERSION: STUDIO 5000 V32
HMI FIRMWARE VERSION: FACTORY TALK STUDIO V10

FILM REQUIREMENTS:
- TYPICAL FILM RANGE 1-1/2 TO 2 MIL.
- SEAL INITIATION TEMP RANGE OF 230 TO 240 DEG.F.
- DYNE LEVEL ON PRINTED FILM TO BE 37-39 UTILIZING SOLVENT BASED INKS.
- SHRINK PROPERTIES:
  - TD SHRINK 0-20% (TO BE TUNED PER APPLICATION)
  - MD SHRINK 50-70 %P- ROLL WIDTH OF 12" TO 24"
- ROLL DIAMETER 9-20"
- 3" DIAMETER CORE

Approved By:
Signature:
Date:
RETURN TO:
ARPAC

ARPAC
A DURAVANT COMPANY
9555 WEST IRVING PARK RD.
SCHILLER PARK, IL 60176

DRAWN: 4/22/2021	BY: SRA	SCALE: N/A	SIZE: B		
RELEASED:	FILENAME S220562-2-1	APPROVED BY:			
DESCRIPTION: LAYOUT, TRAY WRAPPER, BPTW-6000					
BLUE MARBLE PRODUCTIONS		DRAWING NUMBER: S220562-2-1			

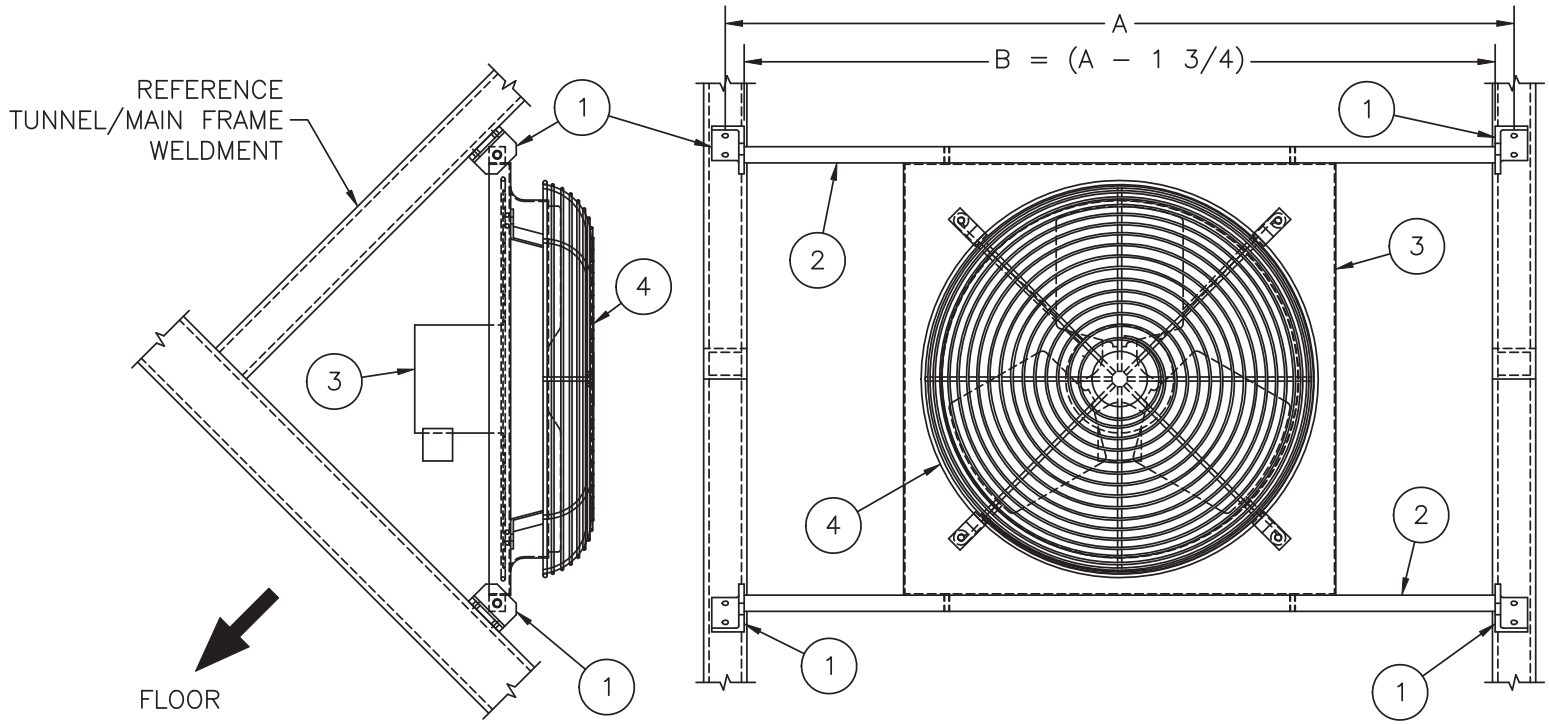

54 3/8	52 5/8	112380–015
57 1/4	55 1/2	112380–014
41	39 1/4	112380–013
27 1/4	25 1/2	112380–012
45	43 1/4	112380–011
–	–	112380–010
–	–	112380–009
57	55 1/2	112380–008
40 1/4	38 1/2	112380–007
48 3/4	47	112380–006
36 1/2	34 3/4	112380–005
68 1/4	67 1/2	112380–004
42 1/4	40 1/2	112380–003
46 1/4	44 1/2	112380–002
39 1/4	37 1/2	112380–001
A	B	ASSY NUMBER

ITM	QTY	PART NUM	DESCRIPTION
4	1	121309	WLDMT, GUARD, FAN, SAFETY, 16 DIA
3	1	121296	FAN, EXHAUST, 16" DIA BLADE, 20" SQ, MOD
2	2	112382–XXX	BAR, MTG, FAN, COOLING, BELT
1	4	112381	BKT, MTG, FAN, COOLING, BELT

BILL OF MATERIAL

ARPAC 9511 WEST RIVER ST.
SCHILLER PARK, IL 60176

UNLESS OTHERWISE SPECIFIED ALL DIMENSIONAL TOLERANCES:
FRACTIONS ± 1/64
TWO (2) DECIMALS ± 0.010
THREE (3) DECIMALS ± 0.005
ANGLES ± 0.5°

DRAWN: 8–2–99	BY: JPC	SCALE: 1/8"=1"	SIZE: A
RELEASED: 8–2–99	FILENAME: 112380	APPROVED BY: JPC	

DESCRIPTION: ASSY, FAN, COOLING, BELT

DRAWING NUMBER: 112380

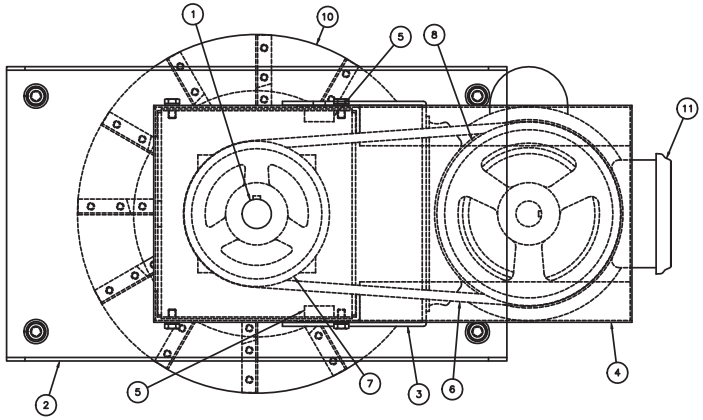

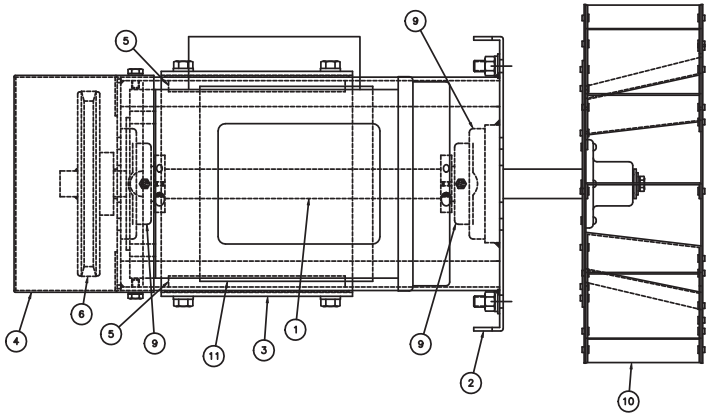

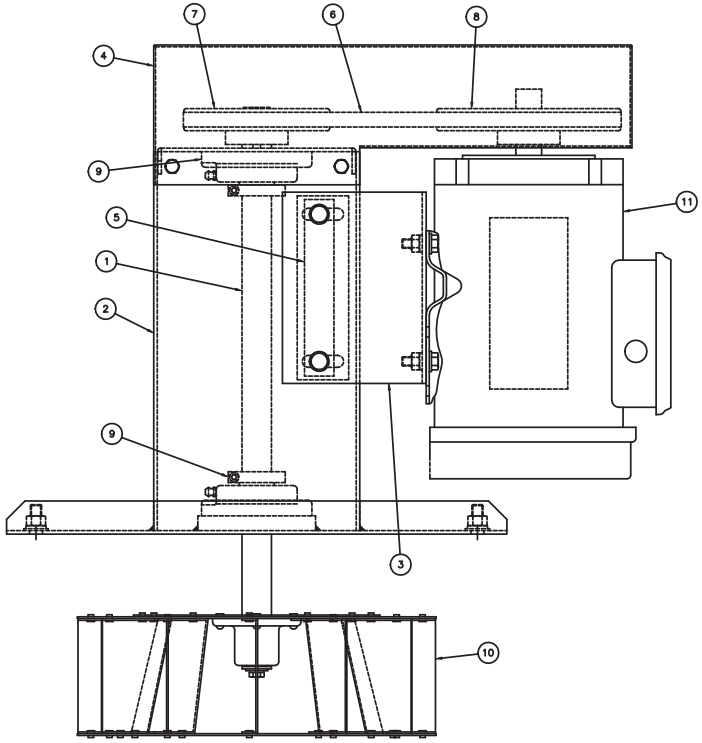

NOTE: USE WITH INLET CONE #803039

ARPAC 9511 WEST RIVER ST. SCHILLER PARK, IL 60176			
UNLESS OTHERWISE SPECIFIED ALL DIMENSIONAL TOLERANCES:	FRACTIONS ± 1/64 TWO (2) DECIMALS ± 0.010 THREE (3) DECIMALS ± 0.005 ANGLES ± 0.5°		
DRAWN: 6-8-99	BY: KGL	SCALE: 3/8"=1"	SIZE: C
RELEASED: 6-8-99	FILENAME: 114196L	APPROVED BY: KGL	
DESCRIPTION: ASSY, BLOWER, TUNNEL, 1 1/2HP, 230/460V, STD			
		DRAWING NUMBER: 114196L	

REVISIONS			
RV	DATE	BY	DESCRIPTION
A	11-26-18	JW	UPDATED PER DCR #18591

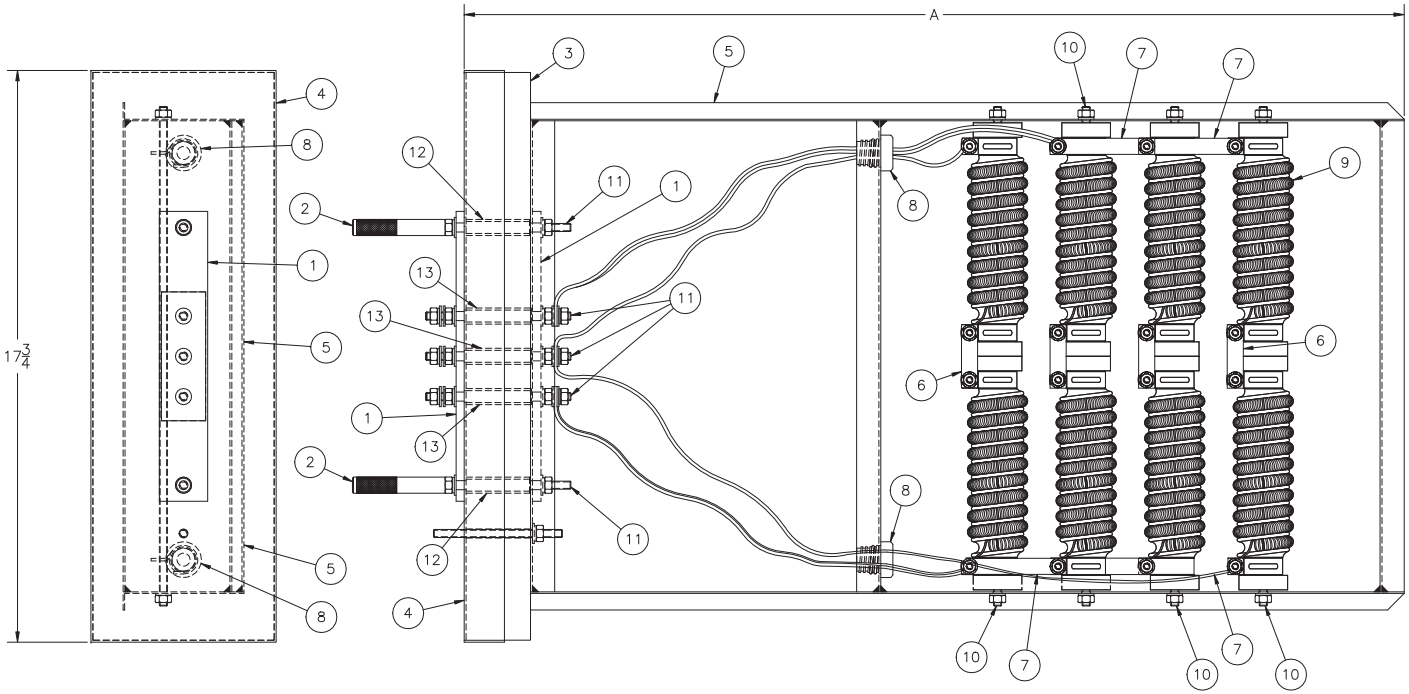

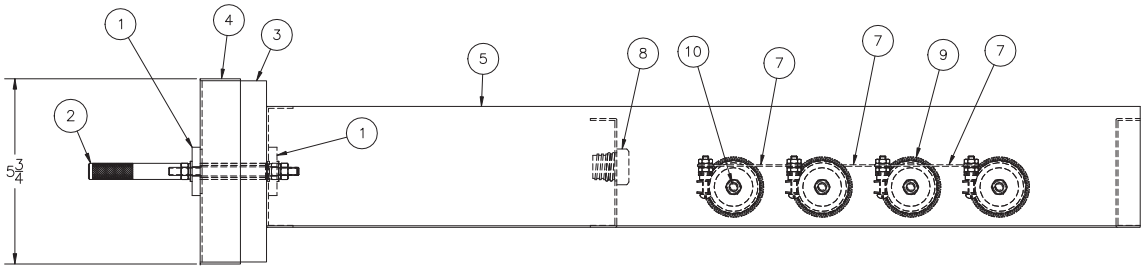

PART NUMBER 121097-3Y SHOWN ABOVE

PART NUMBER = 121097-XY

WT = INSIDE TUNNEL WIDTH

48	36 7/16	120885-007	7
44	34 7/16	120885-006	6
40	32 7/16	120885-005	5
36	30 7/16	120885-004	4
32	28 7/16	120885-003	3
28	26 7/16	120885-002	2
24	24 7/16	120885-001	1
WT	A	ITEM #5	X

VOLTS = VOLTAGE FOR ENTIRE TRAY
VE = VOLTAGE FOR SINGLE ELEMENT

575	300	3000	804016-019	13
460	230	3000	804016-014	03
VOLTS	VE	WATTS	ITEM #8	Y

ITM	QTY	PART NUM	DESCRIPTION
13	3	141722-002	SS RND TBG 1/2 OD x 16 Ga WALL x 2 3/32 LG
12	2	141722-001	SS RND TBG 1/2 OD x 16 Ga WALL x 1 31/32 LG
11	5	141723-004	SS THRD ROD, 1/4-20, 4 1/2 LG
10	4	141723-003	SS THRD ROD, 1/4-20, 15 1/2 LG
9	8	804016-XXX	HEATER
8	2	803878	BUSH, CERAMIC, #20, W/ CLAMP
7	4	108680-003	STRAP, CONNECTOR, ELEMENT, 3 1/4 LG
6	4	108680-001	STRAP, CONNECTOR, ELEMENT, 1 31/32 LG
5	1	120885-XXX	WLDMT, FRAME, TRAY, ELEMENT, EIGHT, ...
4	1	108678	COVER, TRAY, ELEMENT
3	1	108677	INSULATION, COVER, TRAY, ELEMENT, INTAKE, UPPER
2	2	101977	HANDLE, TRAY, ELEMENT
1	2	101976	INSULATOR, TRAY, ELEMENT

BILL OF MATERIAL

ARPAC 9511 WEST RIVER ST.
SCHILLER PARK, IL 60176

UNLESS OTHERWISE SPECIFIED ALL DIMENSIONAL TOLERANCES:
FRACTIONS ± 1/64
TWO (2) DECIMALS ± 0.010
THREE (3) DECIMALS ± 0.005
ANGLES ± 0.5°

DRAWN: 10-26-98	BY: JPC	SCALE: 1/4"=1"	SIZE: B
RELEASED: 10-26-98	FILENAME: 121097	APPROVED BY: JPC	

DESCRIPTION: ASSY, TRAY, ELEMENT, 8, TUNNEL, INTAKE, UPPER, SERIES WIRING

DRAWING NUMBER: 121097

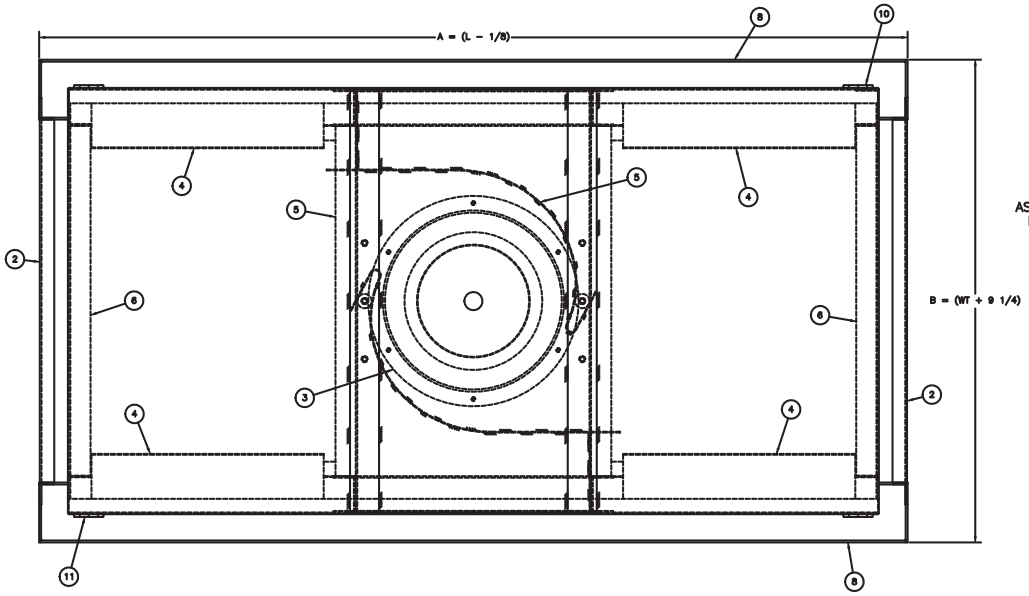

ASSEMBLY NUMBER 128339-???
L = 60, WT = 24, H = 14
SHOWN

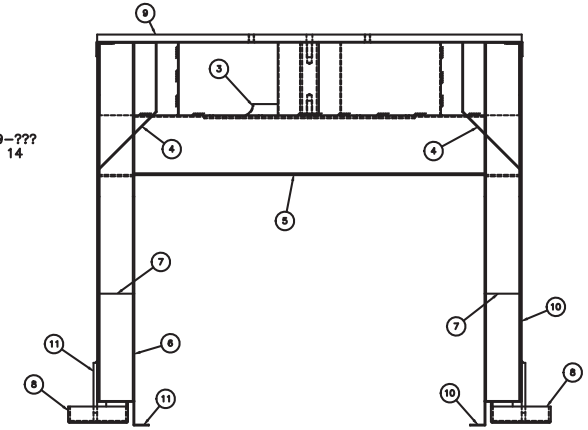

SECTION A-A

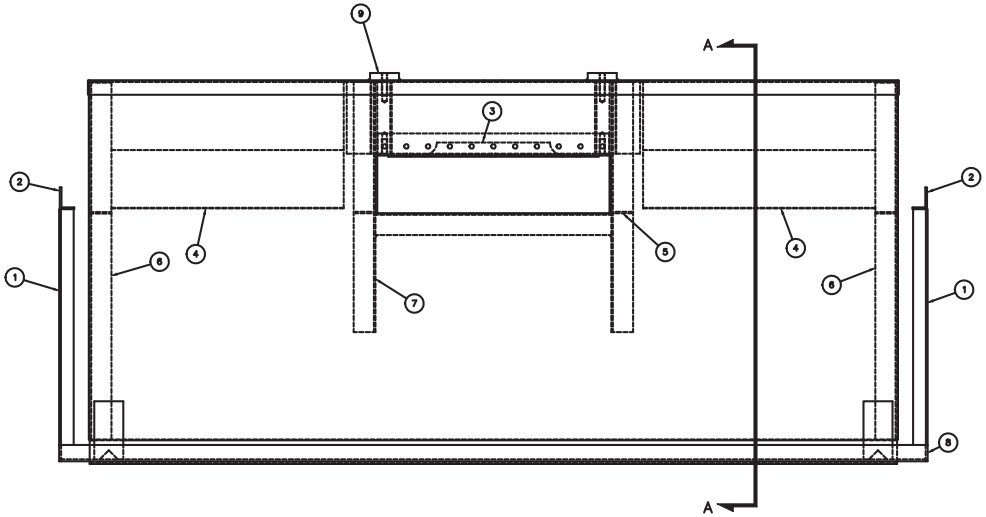

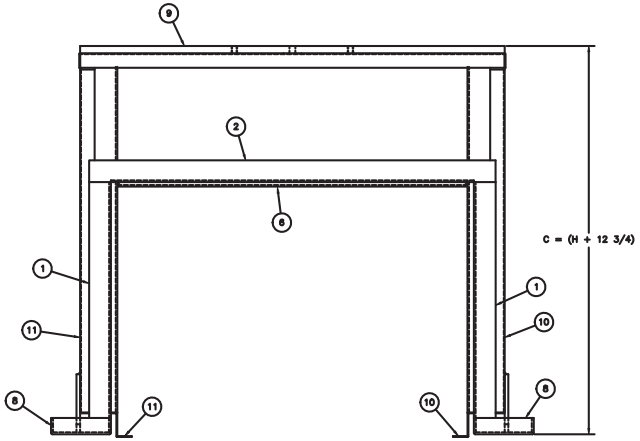

L = TUNNEL LENGTH

60	79 7/8
70	89 7/8
80	99 7/8
L	A

WT = INSIDE TUNNEL WIDTH

48	57 1/4
44	53 1/4
40	49 1/4
36	45 1/4
32	41 1/4
28	37 1/4
24	33 1/4
WT	B

H = INSIDE TUNNEL HEIGTH

40	52 3/4
28	38 3/4
24	36 3/4
22	34 3/4
20	32 3/4
18	30 3/4
16	28 3/4
14	26 3/4
H	C

BILL OF MATERIAL

ITM	QTY	PART NUM	DESCRIPTION
11	1	128312-XXX	WLDMT, PLT, SIDE, HOUSING, INR, ACCESS, ELEMENT
10	1	128311-XXX	WLDMT, PLT, SIDE, HOUSING, INNER, ZONE, SINGLE
9	1	121762-XXX	WLDMT, PLT, TOP, HOUSING, INNER, TUNNEL

BILL OF MATERIAL

ITM	QTY	PART NUM	DESCRIPTION
8	2	121103-XXX	WLDMT, RUNNER, BASE
7	2	120957-XXX	WLDMT, FRAME, END, HOUSING, ELEMENT, &, BLOWER
6	2	120956-XXX	WLDMT, FRAME, END, HOUSING, INNER, TUNNEL
5	1	120954-XXX	WLDMT, HOUSING, ELEMENT, AND, BLOWER
4	4	108702-XXX	BAFFLE, CORNER, TUNNEL, INTAKE, UPPER
3	1	108688	WLDMT, PLT, ACCESS, BLOWER, &, CONE, INLET
2	2	101981-XXX	MEMBER, HOR, FRAME, END, TUNNEL
1	4	101980-XXX	MEMBER, VER, FRAME, END, TUNNEL

ARPAC 9511 WEST RIVER ST.
SCHILLER PARK, IL 60176

UNLESS OTHERWISE SPECIFIED
ALL DIMENSIONAL TOLERANCES:
FRACTIONS ± 1/64
TWO PLACE DECIMALS ± 0.010
THREE PLACE DECIMALS ± 0.005
ANGLES ± 0.5°

DRAWN	1-6-99	BY	KGL	SCALE 1/4"=1"	SIZE D
RELEASED	1-6-99	PAGE/NUM	128339L	APPROVED BY	KGL

DESCRIPTION:
ASSY, HOUSING, INNER, TUNNEL, INTAKE, UPPER,
ZONE, SINGLE, FLOW, AIR, BOTTOM

DRAWING NUMBER:
128339L

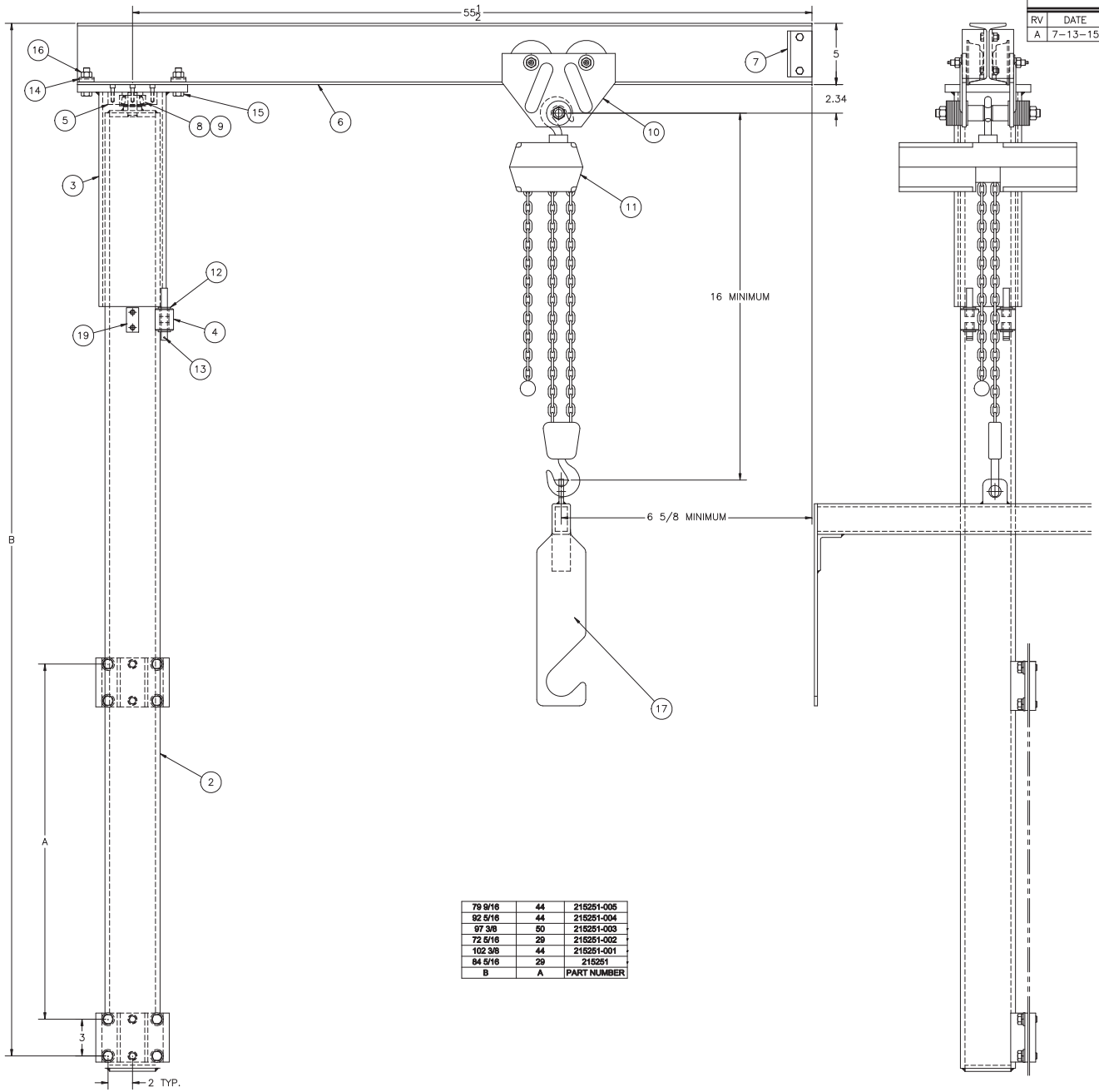

REVISIONS			
RV	DATE	BY	DESCRIPTION
A	7-13-15	SRA	ADDED ITEM 19 STOP BLOCK

NOTES:
JIB CRANE MOUNT PLATE (ITEM 1) ONLY USED WHEN CLEARANCE IS AVAILABLE INSIDE OF FRAME.

PRESS FIT TIMKEN CUP (ITEM 9) INTO JIB CRANE BEARING CUP (ITEM 5). PRESS FIT TIMKEN CONE (ITEM 8) ONTO JIB COLUMN (ITEM 2).

79 9/16	44	215251-005
92 5/16	44	215251-004
97 3/8	50	215251-003
72 5/16	29	215251-002
102 3/8	44	215251-001
84 5/16	29	215251
B	A	PART NUMBER

ITEM 18 NOT SHOWN

ARPAC 9511 WEST RIVER ST. SCHILLER PARK, IL 60176

UNLESS OTHERWISE SPECIFIED ALL DIMENSIONAL TOLERANCES: FRACTIONS ± 1/64; TWO (2) DECIMALS ± 0.010; THREE (3) DECIMALS ± 0.005; ANGLES ± 0.5°

DRAWN: 11-18-02 BY: AR SCALE: 3/16"=1" SIZE: C

RELEASED: FILENAME: 215251 APPROVED BY: AR

DESCRIPTION: ASSY, CRANE, JIB, 300 LB CAPACITY

BPTW

DRAWING NUMBER: 215251

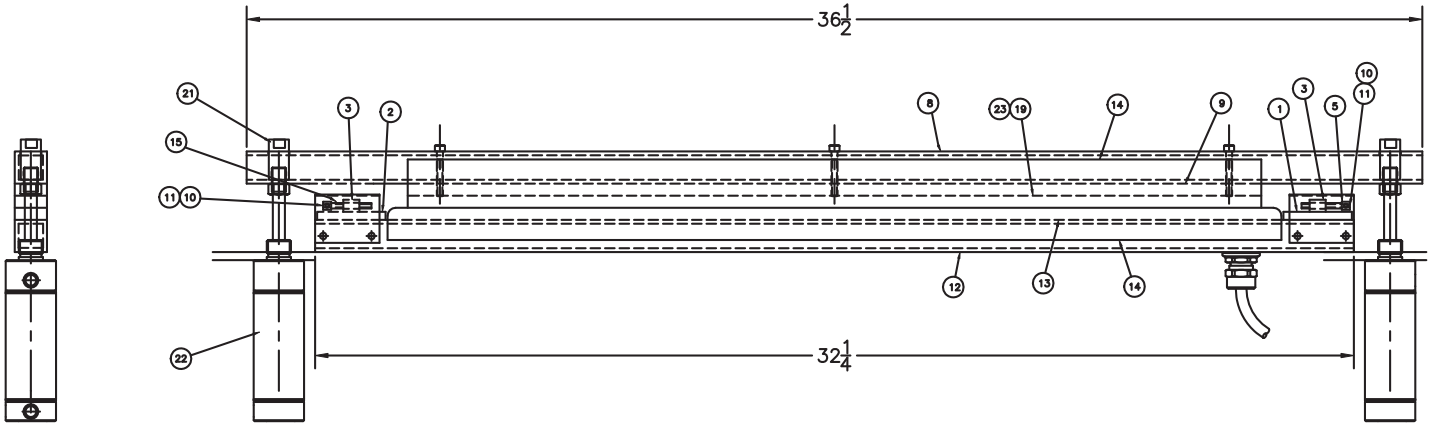

ARPAC 9511 WEST RIVER ST.
SCHILLER PARK, IL 60176

UNLESS OTHERWISE SPECIFIED
ALL DIMENSIONAL TOLERANCES:

FRACTIONS	± 1/64
TWO (2) DECIMALS	± 0.010
THREE (3) DECIMALS	± 0.005
ANGLES	± 0.5°

DRAWN: 5-17-04	BY: YL	SCALE: 1/4"=1"	SIZE: B
RELEASED: 5-17-04	FILENAME: 226659	APPROVED BY: YL	

DESCRIPTION: ASSY, BAR, SPLICE, PNEUMATIC

DRAWING NUMBER: 226659

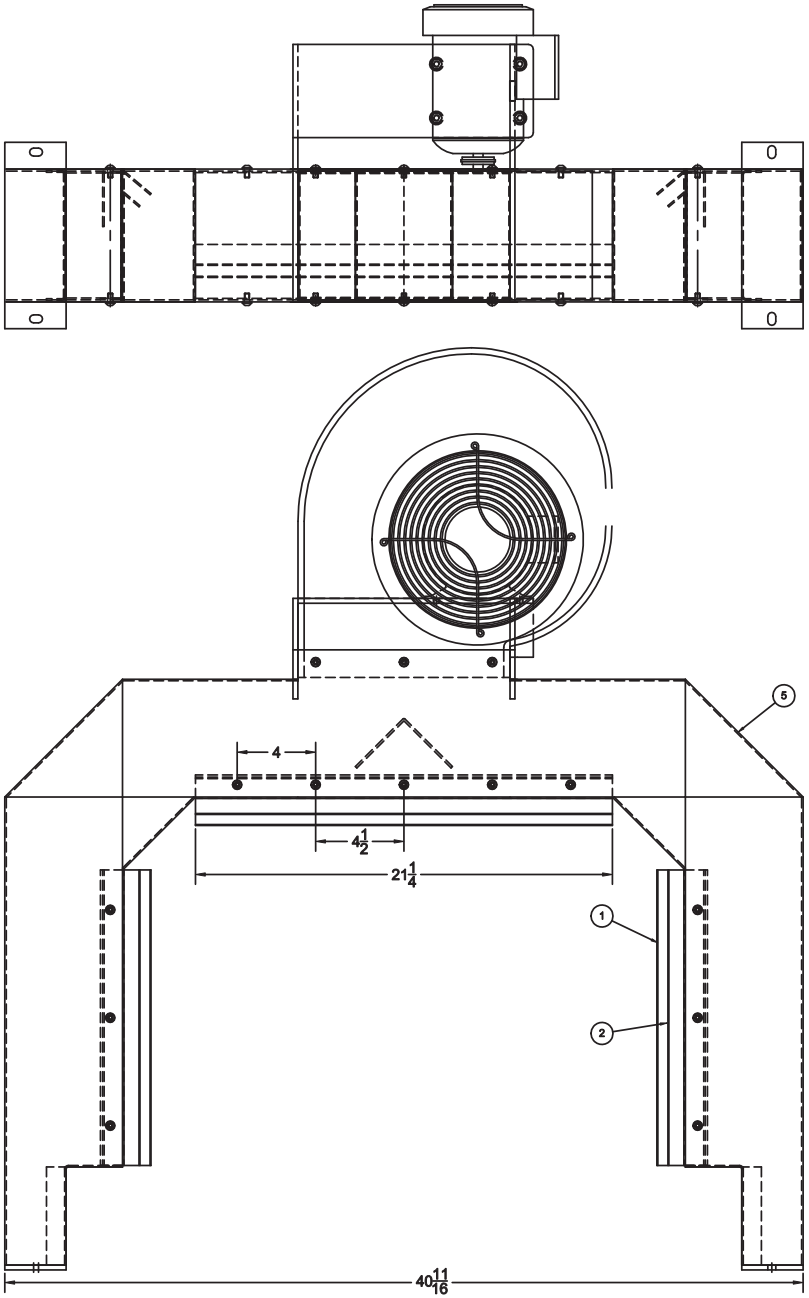

ITM	QTY	PART NUM	DESCRIPTION
8	1	803229	MOTOR, 120VAC, 1/4 HP
7	1	803035	FAN, COOLING
6	1	803027	GUARD, FAN, 7 1/2
5	1	251073	WLDMT, COOLING, 3-WAY
4	1	114129-012	DEFLECTOR, AIR, HOR, DNSTRM, COOLING, 3-WAY
3	1	114128-012	DEFLECTOR, AIR, HOR, UPSTRM, COOLING, 3-WAY
2	2	119681	DEFLECTOR, AIR, VER, DNSTRM, COOLING, 3-WAY
1	2	119680	DEFLECTOR, AIR, VER, UPTSRM, COOLING, 3-WAY

BILL OF MATERIAL

ARPAC
9511 WEST RIVER ST.
SCHILLER PARK, IL 60176

UNLESS OTHERWISE SPECIFIED ALL DIMENSIONAL TOLERANCES:
FRACTIONS ± 1/64
TWO (2) DECIMALS ± 0.010
THREE (3) DECIMALS ± 0.005
ANGLES ± 0.5°

DRAWN:	11-12-07	BY:	YYL	SCALE:	1/4"=1"	SIZE:	C
RELEASED:	11-12-07	FILENAME:	251074	APPROVED BY:	YYL		

DESCRIPTION: ASSY, PRODUCT, COOLING, 3-WAY

43" W

DRAWING NUMBER: 251074

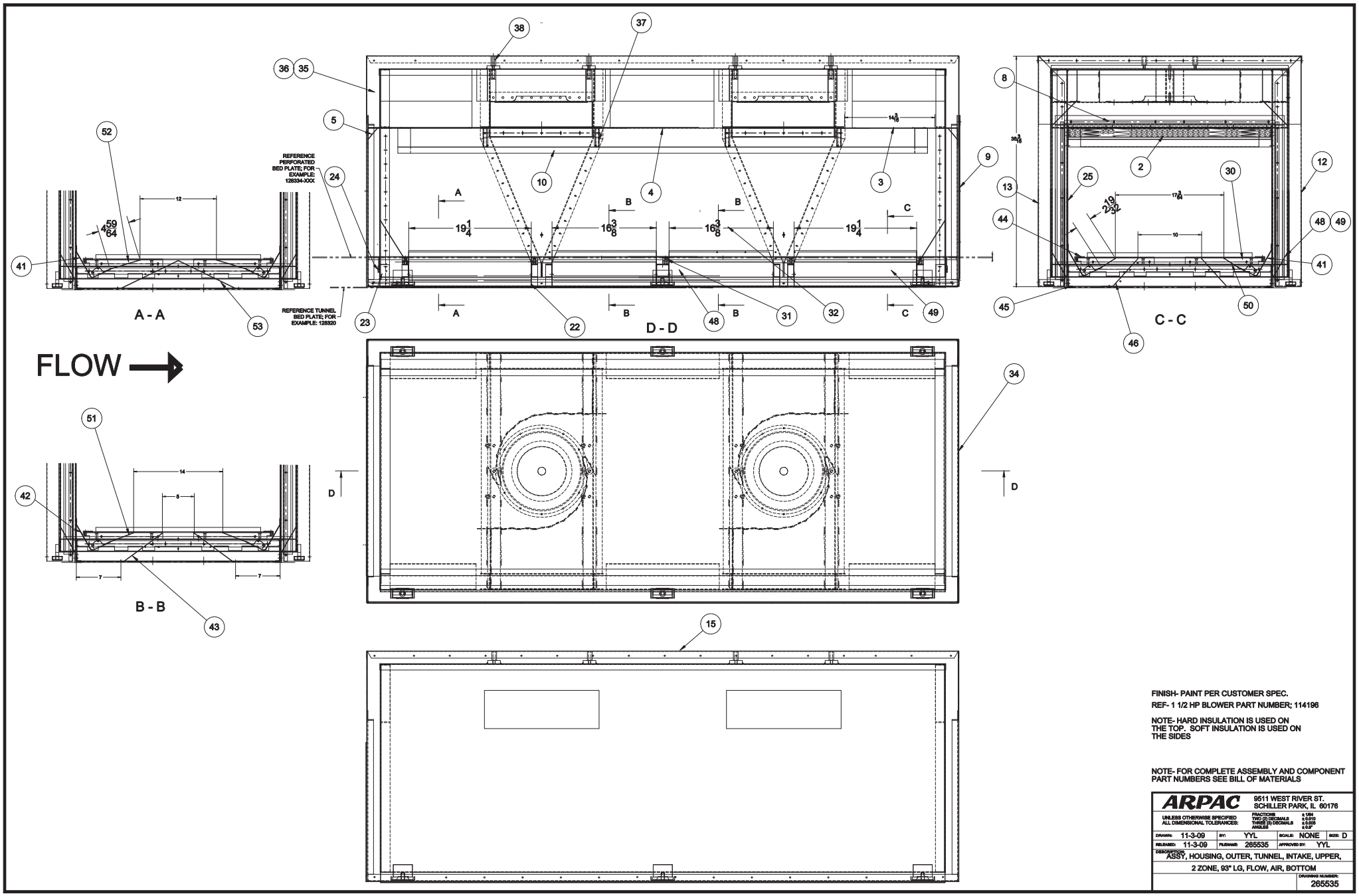

FINISH- PAINT PER CUSTOMER SPEC.

REF- 1 1/2 HP BLOWER PART NUMBER; 114196

NOTE- HARD INSULATION IS USED ON THE TOP. SOFT INSULATION IS USED ON THE SIDES

NOTE- FOR COMPLETE ASSEMBLY AND COMPONENT PART NUMBERS SEE BILL OF MATERIALS

ARPAC	9511 WEST RIVER ST. SCHILLER PARK, IL 60176		
UNLESS OTHERWISE SPECIFIED ALL DIMENSIONAL TOLERANCES:	FRACTIONS ± 1/64; TWO (2) DECIMALS ± 0.010; THREE (3) DECIMALS ± 0.005; ANGLES ± 0.5°		
DRAWN: 11-3-09	BY: YYL	SCALE: NONE	SIZE: D
RELEASED: 11-3-09	FILENAME: 265535	APPROVED BY: YYL	
DESCRIPTION: ASSY, HOUSING, OUTER, TUNNEL, INTAKE, UPPER, 2 ZONE, 93" LG, FLOW, AIR, BOTTOM			
		DRAWING NUMBER: 265535	

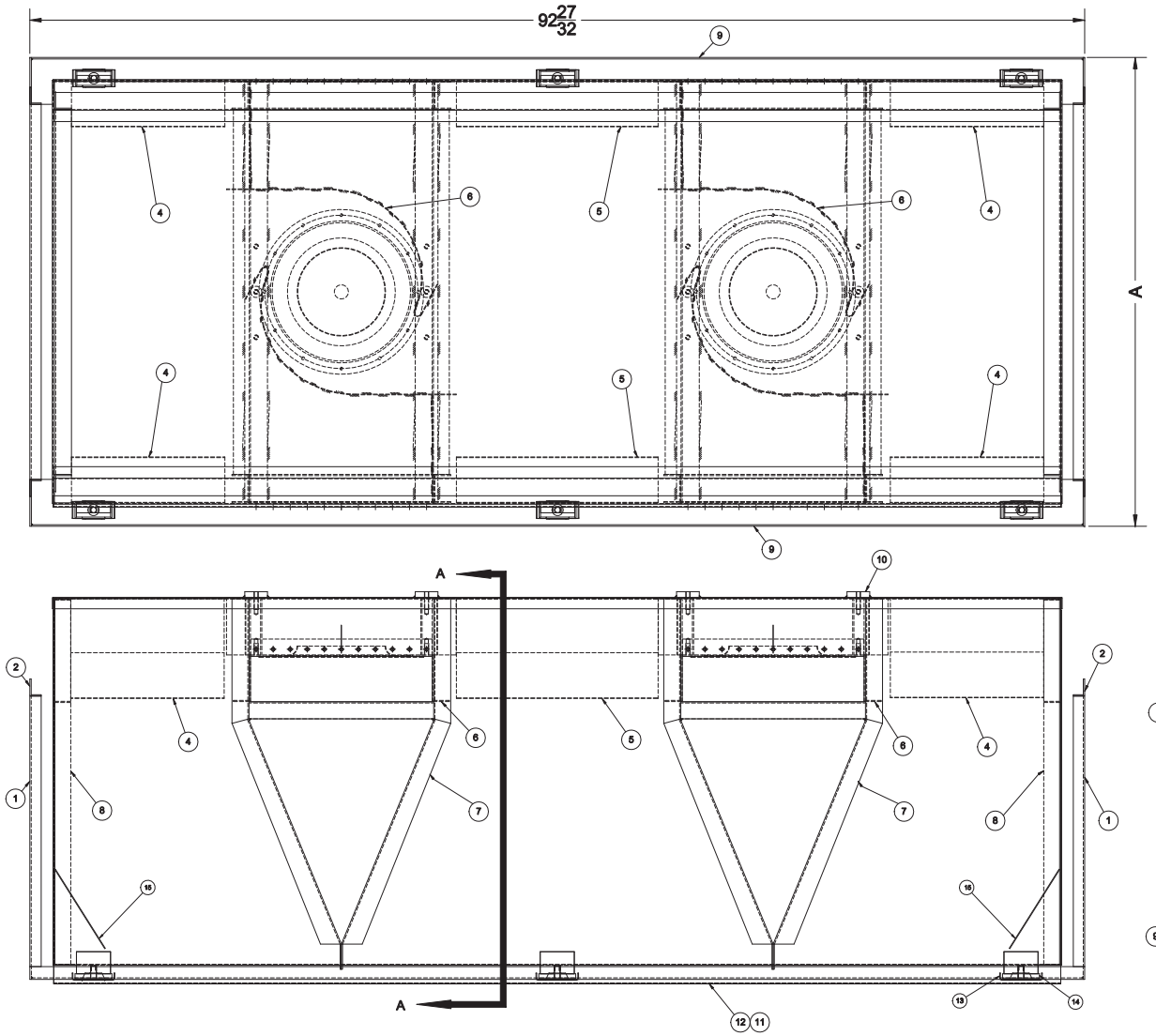

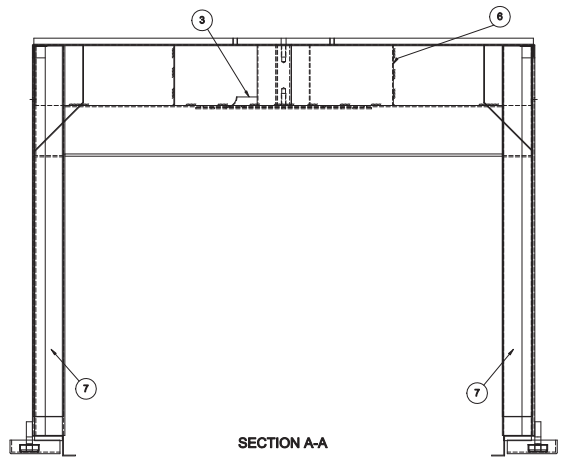

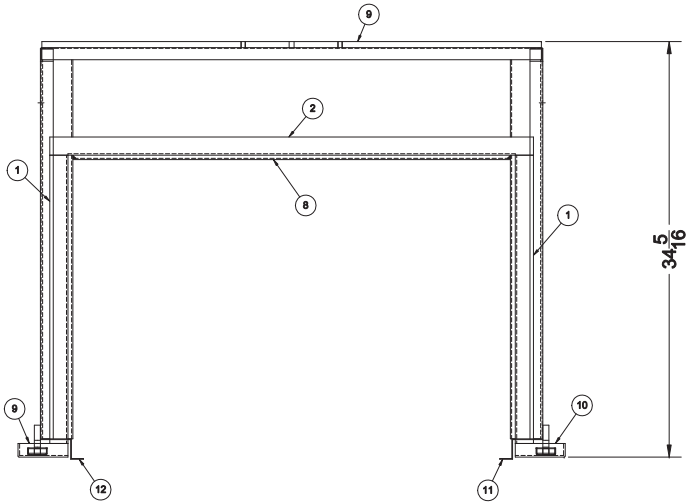

PART #	A
265602	41 1/4
265602-001	45 1/4

FINISH- NONE

BILL OF MATERIAL

ITM	QTY	PART NUM	DESCRIPTION
15	4	247340	BAFFLE, PLT, BOT FLOW
14	6	199202	BLOCK, INSULATION, FOOT, TUNNEL
13	6	199201	POCKET, FOOT, TUNNEL
12	1	189646-205	WLDMT, PLT, SIDE, HOUSING, INNER, ZONE, DUAL
11	1	189647-205	WLDMT, PLT, SIDE, HOUSING, INNER, ACCESS, ELEMENT, ZONE, DUAL
10	2	199204-006	WLDMT, RUNNER, BASE

BILL OF MATERIAL

ITM	QTY	PART NUM	DESCRIPTION
9	1	106698-203	WLDMT, PLT, TOP, HOUSING, INNER, TUNNEL, ZONE, DUAL
8	2	120966-305	WLDMT, FRAME, END, HOUSING, INNER, TUNNEL
7	4	262306	WLDMT, FRAME, END, HOUSING, ELEMENT, &, BLOWER
6	2	120954-003	WLDMT, HOUSING, ELEMENT, AND, BLOWER
5	2	106702-002	BAFFLE, CORNER, TUNNEL, INTAKE, UPPER, CENTER
4	4	106702-001	BAFFLE, CORNER, TUNNEL, INTAKE, UPPER, END
3	2	106688	WLDMT, PLT, ACCESS, BLOWER, &, CONE, INLET
2	2	101961-013	MBR, HOR, FRAME, END, TUNNEL
1	4	101960-018	MBR, VER, FRAME, END, TUNNEL

ARPAC
9511 WEST RIVER ST.
SCHILLER PARK, IL 60176

UNLESS OTHERWISE SPECIFIED
ALL DIMENSIONAL TOLERANCES:
FRACTIONS ± 1/64
TWO (2) DECIMALS ± 0.010
THREE (3) DECIMALS ± 0.005
ANGLES ± 0.5°

DRAWN:	11-5-09	BY:	YYL	SCALE: 1/4"=1"	SIZE: D
RELEASED:	11-5-09	FILENAME:	265602	APPROVED BY:	YYL

DESCRIPTION:
ASSY, HOUSING, INNER, TUNNEL, INTAKE, UPPER,
ZONE, DUAL, FLOW, AIR, BOTTOM

DRAWING NUMBER:
265602

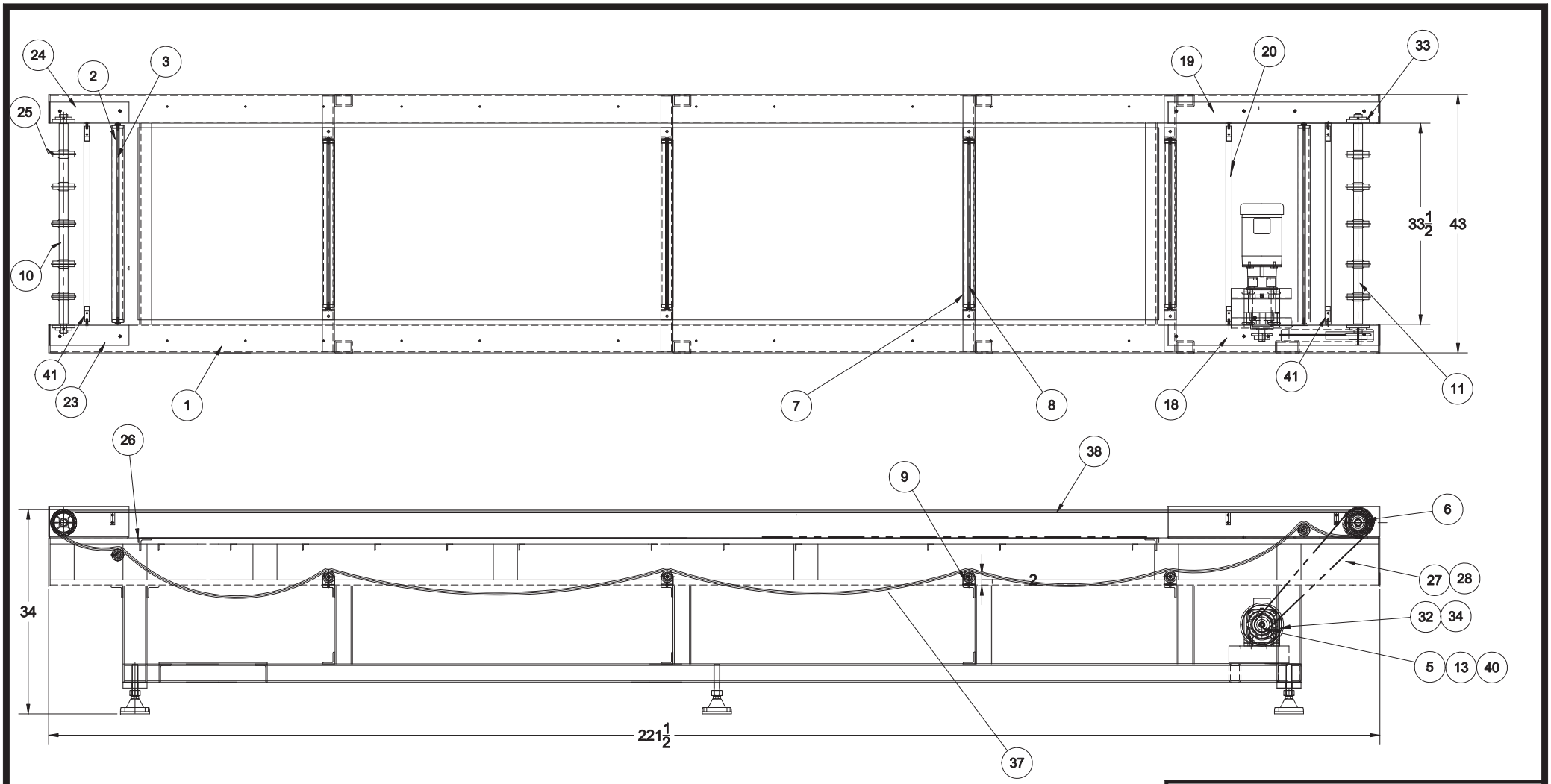

ARPAC

9511 WEST RIVER ST.
SCHILLER PARK, IL 60176

UNLESS OTHERWISE SPECIFIED ALL DIMENSIONAL TOLERANCES:		
	FRACTIONS	± 1/64
	TWO (2) DECIMALS	± 0.010
	THREE (3) DECIMALS	± 0.005
	ANGLES	± 0.5°

DRAWN:	10/18/2013	BY:	GP	SCALE:	1/16"=1"	SIZE:	B
RELEASED:	10/17/13	FILENAME:	298889	APPROVED BY:	SRA		

DESCRIPTION:
ASSY, CONV, DRIVE, TUNNEL

3 ZONE

DRAWING NUMBER:
298889

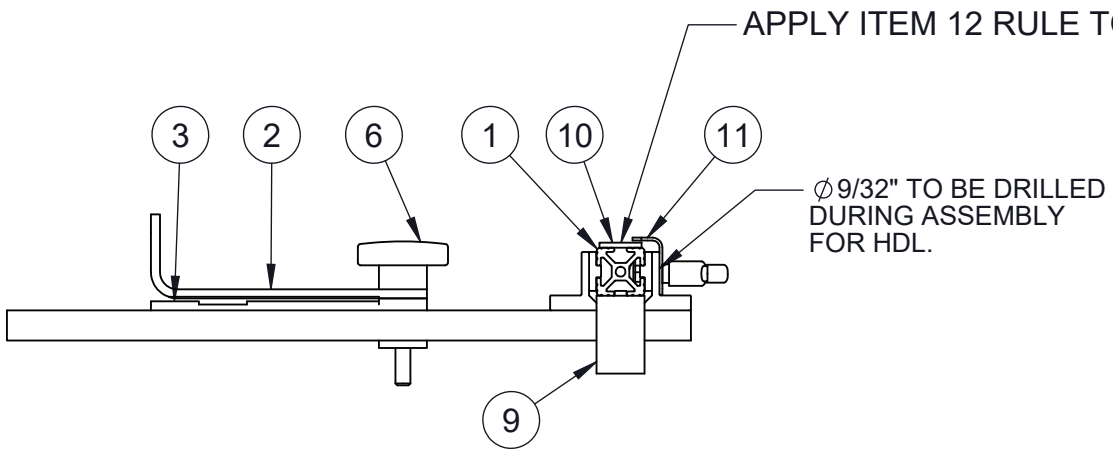

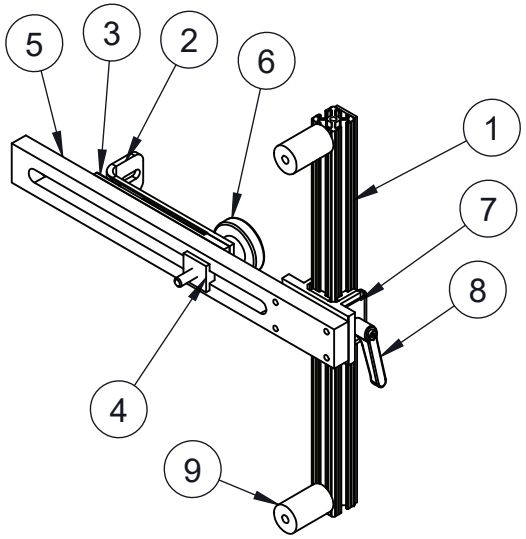

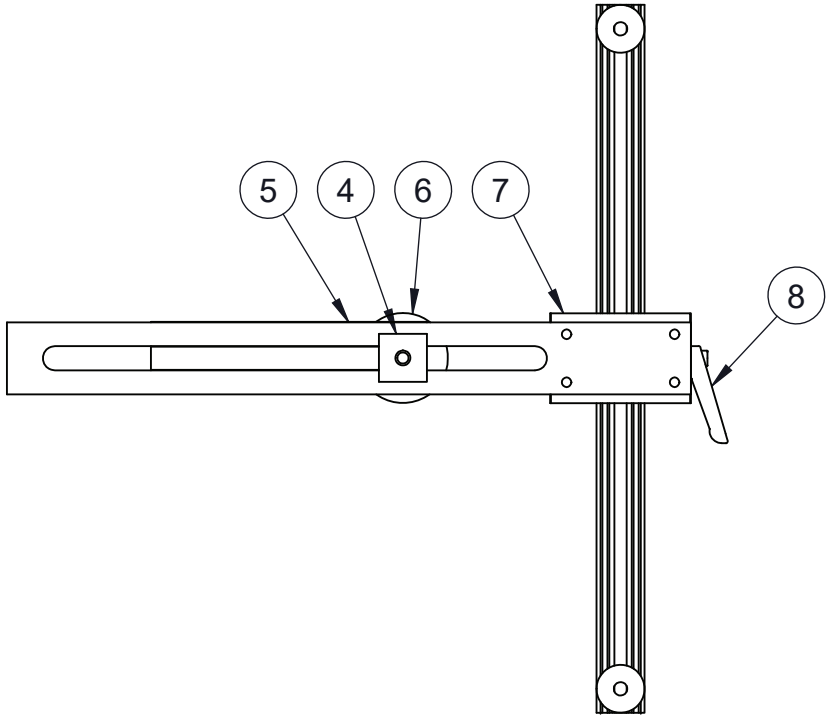

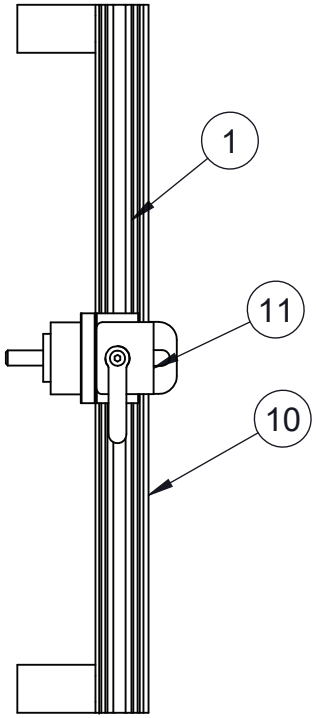

ITM	QTY	PART NUM	DESCRIPTION
12	1	850152	RULE, ADHESIVE BACKED, 1/2 WIDE, VERTICAL, BTM TO TOP
11	1	322623	POINTER, SCALE
10	1	322622	PLT, MTG, SCALE
9	2	220369-002	SPACER, 9/32 ID X 1 OD X 1 1/2 LG
8	1	816551	HDL, L, RATCHETING, 10 SERIES
7	1	816544	BRG, LINEAR, FLANGE, DOUBLE, SERIES 10
6	1	802658	KNOB, BLACK, PLASTIC, 5/16-18 X 2
5	1	241020	ARM, SUPPORT, PHOTO-EYE REG
4	1	225597	NUT, TEE, BKT, PE REG
3	1	224003	PLT, BASE, PE REG
2	1	224004	BKT, MTG, PE REG
1	1	241022	EXTRUSION, 1010 SERIES 14.75" LONG

BILL OF MATERIALS

ARPAC
9511 WEST RIVER ST.
SCHILLER PARK, IL 60176

UNLESS OTHERWISE SPECIFIED ALL DIMENSIONAL TOLERANCES:

FRACTIONS	± 1/64
TWO (2) DECIMALS	± 0.010
THREE (3) DECIMALS	± 0.005
ANGLES	± 0.5°

DRAWN: 12/8/2015	BY: SRA	SCALE: 1:4	SIZE: A
	FILENAME: 322675		

DESCRIPTION: ASSY, REGISTRATION, PRINT, FILM

DRAWING NUMBER: 322675

ARPAC A SIZE FORMAT R4

BILL OF MATERIALS			
ITEM	QTY	NUMBER	DESCRIPTION
1	2	324876	ROD, CONNECT
2	2	324877	PLT, LATCH
3	2	800407	BUSH, OILITE, FLG, 0.3765 X 0.502 X 1/4, 5/8 OD X 1/16 LG FLG
4	2	800323-001	FSNR, BOLT, SHLDR, 3/8 DIA X 3/8 LG, 5/16-18 THD
5	2	800444	WSHR, OILITE, 0.390 X .750 X 1/32 THK

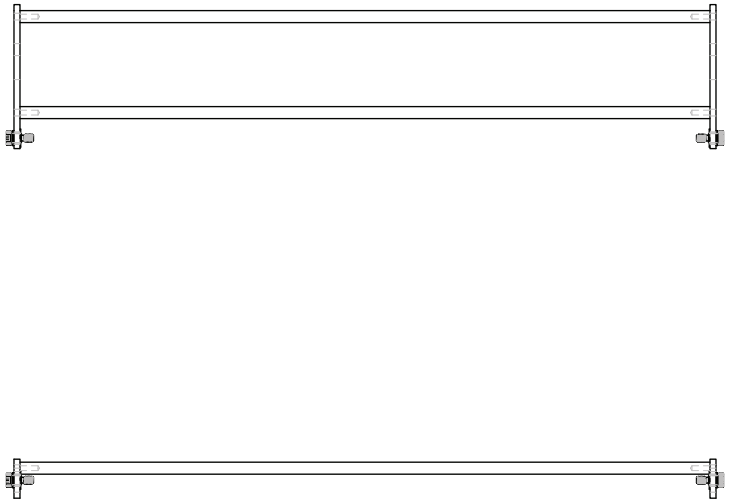

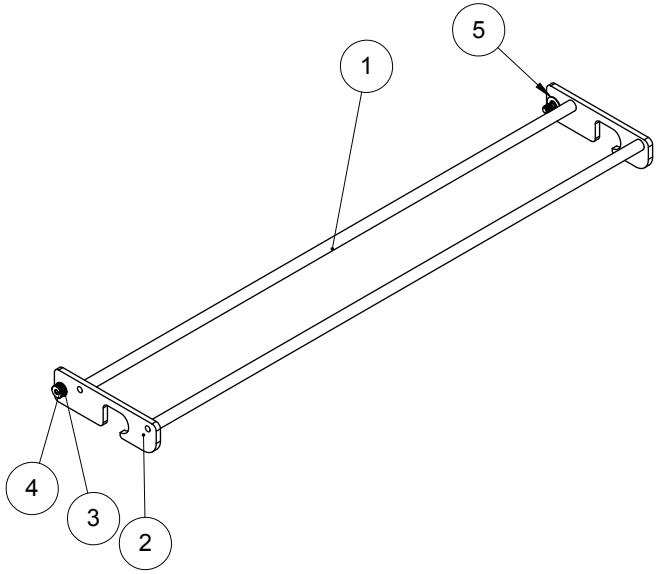

REV	DATE	BY	NOTE
REVISIONS			

NOTES
- INTERPRET PER ASME Y14.5M-1994.
- DIMENSIONS ARE IN INCHES [mm].
- DIMENSIONS IN PARENTHESES FOR REFERENCE ONLY.
- BREAK SHARP EDGES AND CORNERS.
- PROPRIETARY NOTICE: THIS INFORMATION IS THE PROPERTY OF ARPAC LLC AND SHALL NOT BE USED FOR ANY PURPOSE OTHER THAN THAT FOR WHICH IT WAS OBTAINED.
- CREATED IN SOLIDWORKS 2013.

ARPAC
9555 W. Irving Park Rd
Schiller Park, IL 60176
www.arpac.com

MODEL	FILE \ CONFIG	324878\324878
	SIMILAR TO	--
	DATE CREATED	Monday, March 19, 2012 8:56:03 AM
	DATE UPDATED	Friday, March 1, 2019 11:08:29 AM
	UPDATED BY	hhg
DRAFT	DATE CREATED	Wednesday, May 11, 2016 12:35:35 PM
	DATE UPDATED	Tuesday, December 17, 2019 2:00:07 PM
	UPDATED BY	MFitch

SIZE	SCALE	MATERIAL	DESCRIPTION
A	1:8	SEE BILL OF MATERIALS	ASSY, LATCH
3RD ANGLE	UNITS		
	INCH		
TOLERANCES		FINISH	NUMBER
X/X: ±1/32 X.XX: ±.015 X.XXX: ±.005 ANGLES: ±1°		Finish <not specified>	324878

ARPAC D SIZE FORMAT Rev 1

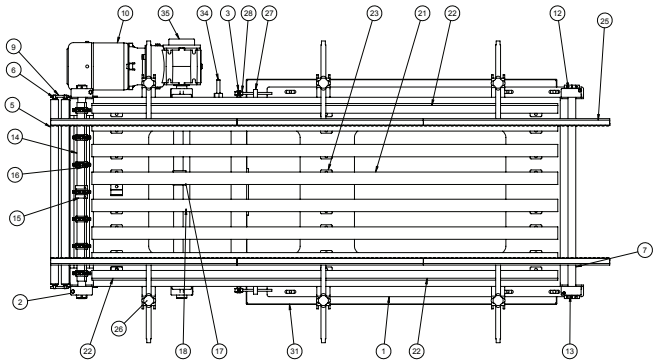

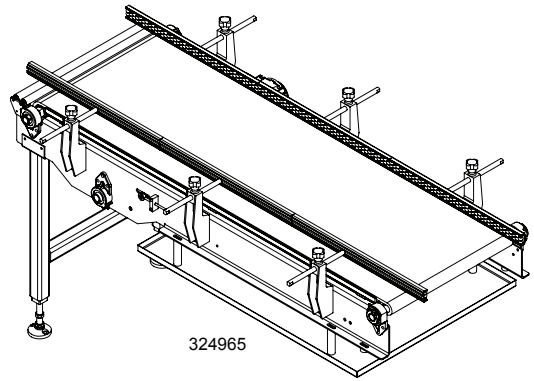

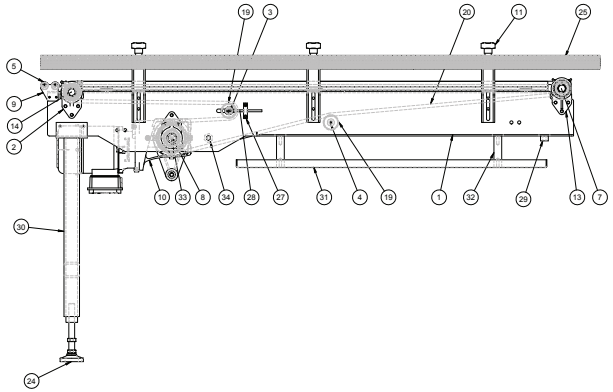

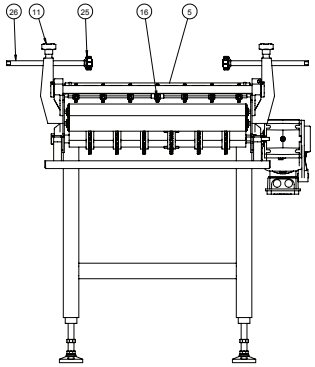

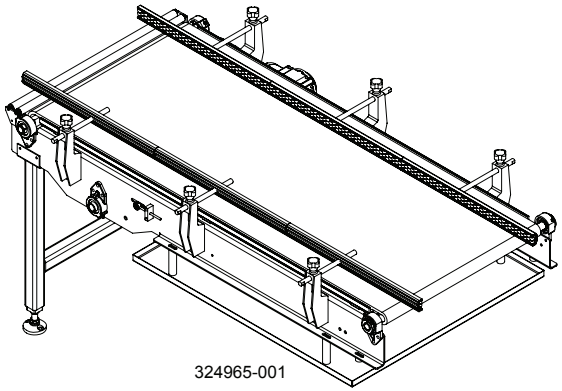

324965 BILL OF MATERIALS

ITEM	QTY	NUMBER	DESCRIPTION
1	1	324966	FRAME, CONV, INFEED
2	4	827122	BRG, FLG, 1 ID, 3 BOLT, NORMAL-DUTY
3	1	133127-007	SHAFT, RLR, HEX, 7/16, TAPPED 5/16-18, 26 LG
4	1	101811-012	SHAFT, RLR, HEX, 7/16, TAPPED 1/4-20,24 L, 52 FRAME WIDTH, 32 SEAL WIDTH
5	2	101805-090	RLR, IDL, AL, 1.000
6	2	137933-025	ROD, CRS, 0.250, TAPPED, 10-32, 24.938 LG
7	1	192777	SHAFT, IDL
8	1	324960	SHAFT, DRIVE, 1 1/2 SQ
9	2	324964	BKT, POP-OUT, RLR
10	1	870542	MOTOR-GEARBOX, 1/2 HP, 230/460V 60HZ, 175 RPM, HELICAL BEVEL, 3/4" DIA HOLLOW SHAFT, M4 MTG, TB4, CEII, W/TORQUE ARM
11	6	814072	BKT, RAIL, GUIDE, HEAVY DUTY, 5/8 R
12	1	231445-002	BRG, MOD
13	1	231445-001	BRG, MOD
14	1	324962	SHAFT, IDL, 1 SQ
15	2	815786	RING, RTNG, 1.00 SQ. SHAFT, SS, SELF SET
16	7	809071	SPKT, 12T, 1 SQ BORE, 2.3" PD, SERIES 1100, MACHINED ACETAL
17	2	800970	RETAINER RING, SELF SET, 1-1/2" SQ SHAFT SS C-TYPE W/SETSCREW
18	6	809086	SPKT, 20T, 1-1/2 SQ BORE, 3.8 PD, NATURAL ACETAL
19	2	106714	RLR, IDL, CRS, 2.000
20	1	809333-001	BELT, FLUSH EDGE FLUSH GRID FRICTION TOP GREY POLYPROPYLENE W/AR RODS, 22"W
21	6	801296-002	RAIL, GUIDE, TEE, 1.60 W, 10' LG CUT TO 99.5", SS
22	2	801292-002	RAIL, GUIDE, TEE, 1.0 X 0.38 L-SHAPE, 8'
23	26	801359	CLAMP, RAIL, SINGLE, 1.5 LG, SS, ROUND HOLE
24	2	827618	LEVELER, ARTICULATING, 7400 # CAP. 3/4-10 STEM, 7.5 HIGH CRS 3" BASE, 2 C'SUNK LAG HOLES, HEAVY LIP ON BASE
25	2	823632-001	GUIDE, BEAD, 686, 1.25 WD, 6FT LG
26	6	845728	ROD, ADJ, 5/8 DIA X 10 LG, 5/16-18 TAPPED THREAD, SS, NUMBERED
27	2	141393-001	TAKE-UP, BLK, MTG
28	2	141394	WLDMT, TAKEUP, COLLAR
29	2	140369-006	SPACER, 1 OD X 13/32 ID X 5/8 LG
30	1	324859	WLDMT, SUPPORT, CONV, INFEED, 34" ELEV
31	1	324858	PAN, DRIP
32	4	139158-001	ROD, 1.000, TAPPED, 3/8-16, 4 LG
33	1	311656	SPECIAL WASHER
34	1	324956	ROD, HEX STANDOFF, GEARBOX ANTI-ROTATION TORQUE ARM MTG, 1" HT SHOULDER
35	1	869670	COVER, SHAFT, GEARBOX, SK 92172.1A

324965-001 BILL OF MATERIALS

ITM	QTY.	PART NUM	DESCRIPTION
35	1	869670	COVER, SHAFT, GEARBOX, SK 92172.1A
34	1	324956	ROD, HEX STANDOFF, GEARBOX ANTI-ROTATION TORQUE ARM MTG, 1" HT SHOULDER
33	1	311656	SPECIAL WASHER
32	4	139158-001	ROD, 1.000, TAPPED, 3/8-16, 4 LG
31	1	324858-001	PAN, DRIP
30	1	324859-001	WLDMT, SUPPORT, CONV, INFEED, 34" ELEV
29	2	140369-006	SPACER, 1 OD X 13/32 ID X 5/8 LG
28	2	141394	WLDMT, TAKEUP, COLLAR
27	2	141393-001	TAKE-UP, BLK, MTG
26	6	845728	ROD, ADJ, 5/8 DIA X 10 LG, 5/16-18 TAPPED THREAD, SS, NUMBERED
25	1	823632-001	GUIDE, BEAD, 686, 1.25 WD, 6FT LG
24	2	827618	LEVELER, ARTICULATING, 7400 # CAP. 3/4-10 STEM, 7.5 HIGH CRS 3" BASE, 2 C'SUNK LAG HOLES, HEAVY LIP ON BASE
23	27	801359	CLAMP, RAIL, SINGLE, 1.5 LG, SS, ROUND HOLE
22	2	801292-002	RAIL, GUIDE, TEE, 1.0 X 0.38 L-SHAPE, 8'
21	7	801296-002	RAIL, GUIDE, TEE, 1.60 W, 10' LG CUT TO 99.5", SS
20	1	809333-002	BELT, FLUSH EDGE FLUSH GRID FRICTION TOP GREY POLYPROPYLENE W/AR RODS, 28"W
19	2	106714-001	RLR, IDL, CRS, 2.00, 32 L TUBE, 47 FRAME WIDTH
18	2	815786	RING, RTNG, 1.00 SQ. SHAFT, SS, SELF SET
17	8	809086	SPKT, 20T, 1-1/2 SQ BORE, 3.8 PD, NATURAL ACETAL
16	8	809071	SPKT, 12T, 1 SQ BORE, 2.3" PD, SERIES 1100, MACHINED ACETAL
15	2	800970	RETAINER RING, SELF SET, 1-1/2" SQ SHAFT SS C-TYPE W/SETSCREW
14	1	324962-001	SHAFT, IDL, 1 SQ
13	1	231445-001	BRG, MOD
12	1	231445-002	BRG, MOD
11	6	814072	BKT, RAIL, GUIDE, HEAVY DUTY, 5/8 R
10	1	870542	MOTOR-GEARBOX, 1/2 HP, 230/460V 60HZ, 175 RPM, HELICAL BEVEL, 3/4" DIA HOLLOW SHAFT, M4 MTG, TB4, CEII, W/TORQUE ARM
9	2	324964	BKT, POP-OUT, RLR
8	1	324960-001	SHAFT, DRIVE, 1 1/2 SQ
7	1	192777-003	SHAFT, IDL
6	2	137933-024	ROD, CRS, 0.250, TAPPED, 10-32, 30.938 LG
5	2	101805-136	RLR, IDL, AL, 1.000
4	1	101811-069	SHAFT, RLR, HEX, 7/16, TAPPED 1/4-20,30 L, FRAME WIDTH, SEAL WIDTH
3	1	133127-016	SHAFT, RLR, HEX, 7/16, TAPPED 5/16-18, 32 LG
2	4	827122	BRG, FLG, 1 ID, 3 BOLT, NORMAL-DUTY
1	1	357196	FRAME, CONV, INFEED

REV	DATE	BY	NOTE
B	2/6/2020	SRA	140369-006 WAS 140369-123
A	1/23/2020	SRA	REMOVED 193943

REVISIONS

NOTES
- INTERPRET PER ASME Y14.5M-1994.
- DIMENSIONS ARE IN INCHES [mm].
- DIMENSIONS IN PARENTHESES FOR REFERENCE ONLY.
- BREAK SHARP EDGES AND CORNERS
- PROPRIETARY NOTICE: THIS INFORMATION IS THE PROPERTY OF ARPAC LLC AND SHALL NOT BE USED FOR ANY PURPOSE OTHER THAN THAT FOR WHICH IT WAS OBTAINED.
- CREATED IN SOLIDWORKS 2018.

CREATED IN SOLIDWORKS 2018

S	FILE \ CONFIG	324965\324965
S	SIMILAR TO	
S	DATE CREATED	Monday, March 21, 2016 5:26:56 PM
S	DATE UPDATED	Thursday, March 19, 2020 8:35:00 PM
S	UPDATED BY	sarcher
F	DATE CREATED	Tuesday, April 19, 2016 4:35:57 PM
S	DATE UPDATED	Thursday, March 19, 2020 6:37:02 PM
S	UPDATED BY	sarcher

ARPAC A DIVISION OF CONVEYOR
8993 W. Loring Park Rd
Sodus Park 15, 85170
www.arpac.com

SIZE	SCALE	MATERIAL	DESCRIPTION
D	1:8	SEE BILL OF MATERIALS	ASSY, CONV, INFEED

3RD ANGLE	UNITS	TOLERANCES	FINISH	NUMBER
	INCH	XX: ±1/32 X.XX: ±.015 X.XXX: ±.005 ANGLES: ±1°	Finish <not specified>	324965

SHEET 1 OF 1

"C:\ARPAC_VAULT\Designs_BRANDPACKAGE\TW\324965.slddrw" accessed Thursday, March 19, 2020.

ARPAC B SIZE FORMAT R4

NOTES

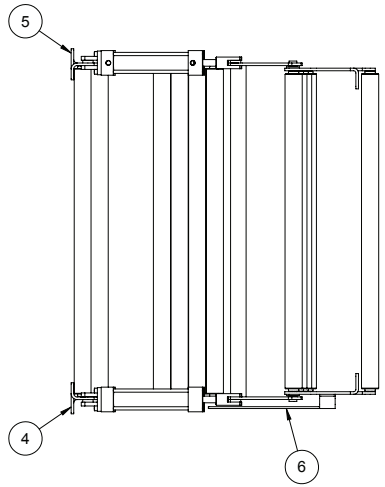

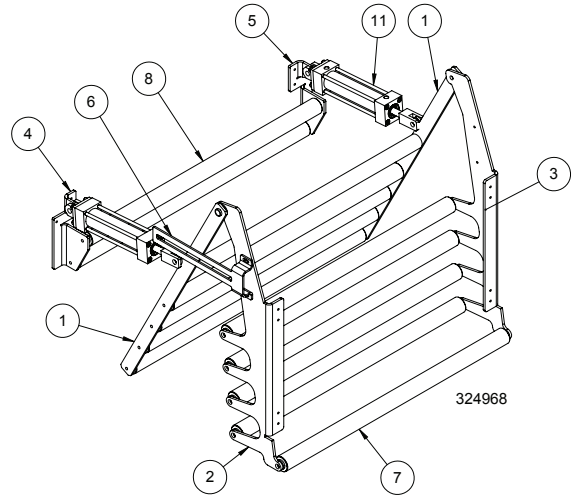

324968 BILL OF MATERIALS			
ITEM	QTY	NUMBER	DESCRIPTION
1	1	319236	WLDMT, ARM, DANCER
2	1	228365-001	BAR, DANCER, STATIONARY, RH
3	1	228365-002	BAR, DANCER, STATIONARY, LH
4	1	324967	BKT, CYL, RH
5	1	324967-001	BKT, CYL, LH
6	1	383408	BKT, SENSOR, PROX, DANCER
7	5	111467-004	RLR, IDL, AL, 1.660, 30 5/16 LG
8	6	111467-003	RLR, IDL, AL, 1.660, 31 5/16 LG
9	5	101811-103	SHAFT, RLR, HEX, 7/16, TAPPED 1/4-20,31 L, FRAME WIDTH, SEAL WIDTH
10	6	101811-132	SHAFT, RLR, HEX, 7/16, TAPPED 1/4-20,32 L, FRAME WIDTH, SEAL WIDTH
11	2	801962	CYL, AIR, 1-3/4 BORE, 6 STROKE, AL SQUAREHEAD, CLEVIS MNT
12	2	800439	WSHR, OILITE, 0.628 X 1.250 X 1/8 THK

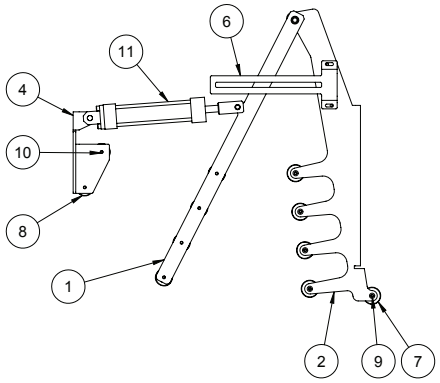

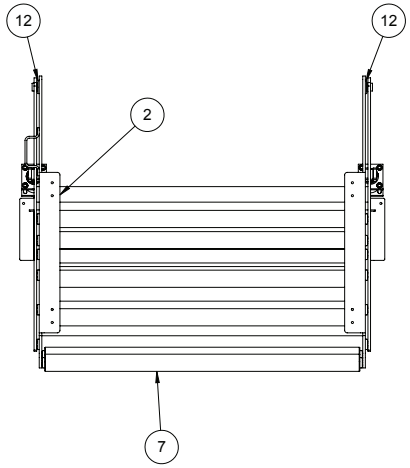

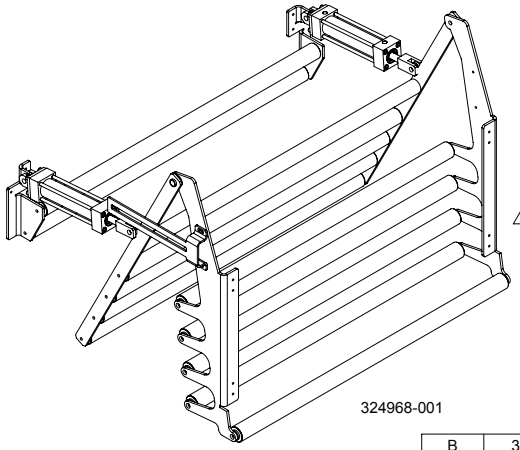

12	2	800439	WSHR, OILITE, 0.628 X 1.250 X 1/8 THK
11	2	801962	CYL, AIR, 1-3/4 BORE, 6 STROKE, AL SQUAREHEAD, CLEVIS MNT
10	6	101811-024	SHAFT, RLR, HEX, 7/16, TAPPED 1/4-20,38 L, FRAME WIDTH, SEAL WIDTH
9	5	101811-262	SHAFT, RLR, HEX, 7/16, TAPPED 1/4-20,37 L, FRAME WIDTH, SEAL WIDTH
8	6	111467-001	RLR, IDL, AL, 1.660, 38 3/8 LG
7	5	111467-006	RLR, IDL, AL, 1.660, 38 3/8 LG
6	1	383408	BKT, SENSOR, PROX, DANCER
5	1	324967-001	BKT, CYL, LH
4	1	324967	BKT, CYL, RH
3	1	228365-002	BAR, DANCER, STATIONARY, LH
2	1	228365-001	BAR, DANCER, STATIONARY, RH
1	1	319236-001	WLDMT, ARM, DANCER
ITM	QTY.	PART NUM	DESCRIPTION
324968-001 BILL OF MATERIALS			

REV	DATE	BY	NOTE
B	3/23/2021	SRA	383408 WAS 324855
A	1/22/2020	SRA	324855 WAS 324855-001

REVISIONS

NOTES
- INTERPRET PER ASME Y14.5M-1994.
- DIMENSIONS ARE IN INCHES [mm].
- DIMENSIONS IN PARENTHESES FOR REFERENCE ONLY.
- BREAK SHARP EDGES AND CORNERS.
- PROPRIETARY NOTICE: THIS INFORMATION IS THE PROPERTY OF ARPAC LLC AND SHALL NOT BE USED FOR ANY PURPOSE OTHER THAN THAT FOR WHICH IT WAS OBTAINED.
- CREATED IN SOLIDWORKS 2013.

ARPAC
9555 W. Irving Park Rd
Schiller Park, IL 60176
www.arpac.com

MODEL	FILE \ CONFIG	324968\324968
	SIMILAR TO	--
	DATE CREATED	Wednesday, March 7, 2012 10:12:41 AM
	DATE UPDATED	Tuesday, March 23, 2021 2:32:26 PM
	UPDATED BY	sarcher
DRAFT	DATE CREATED	Friday, April 22, 2016 9:16:20 AM
	DATE UPDATED	Tuesday, March 23, 2021 2:31:22 PM
	UPDATED BY	sarcher

SIZE: B
SCALE: 1:12
3RD ANGLE
UNITS: INCH
TOLERANCES
X/X: ±1/32
X.XX: ±.015
X.XXX: ±.005
ANGLES: ±1°

MATERIAL: SEE BILL OF MATERIALS
FINISH: NONE
DESCRIPTION: ASSY, DANCER, BPTW
NUMBER: 324968

"C:\ARPAC_VAULT\Designs_BRANDPAC\BPTW\324968.slddrw" accessed Tuesday, March 23, 2021.

SHEET 1 OF 1

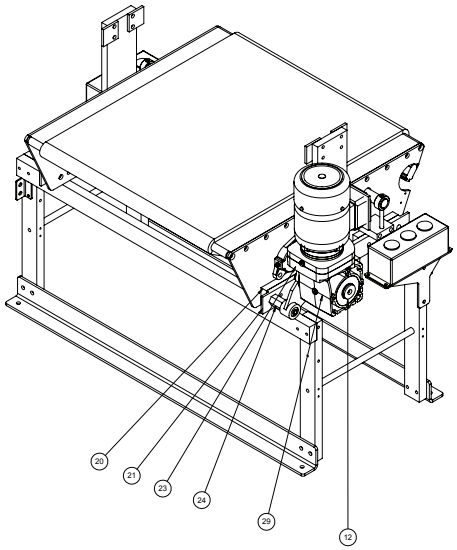

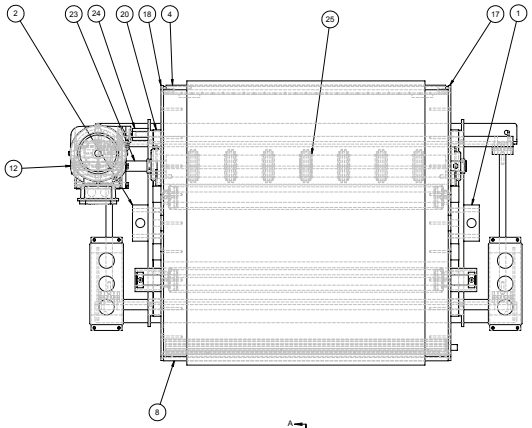

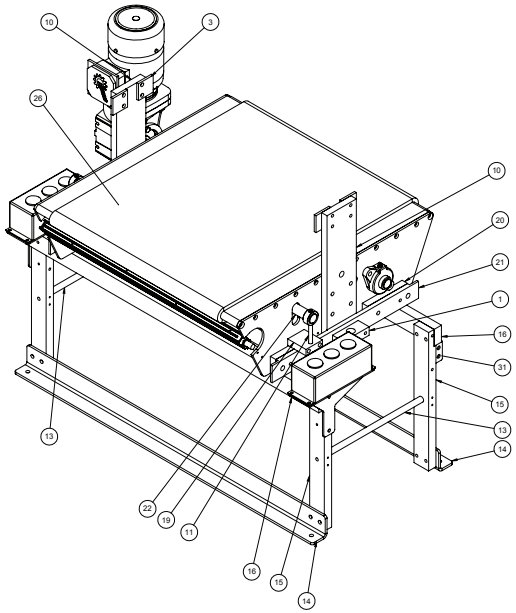

>>> PRODUCT FLOW >>>

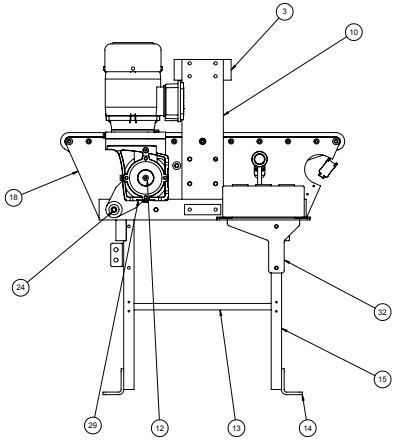

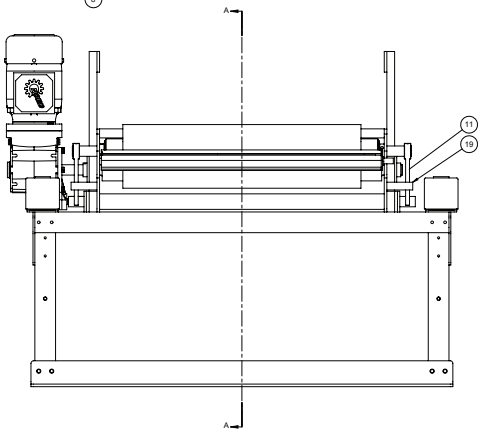

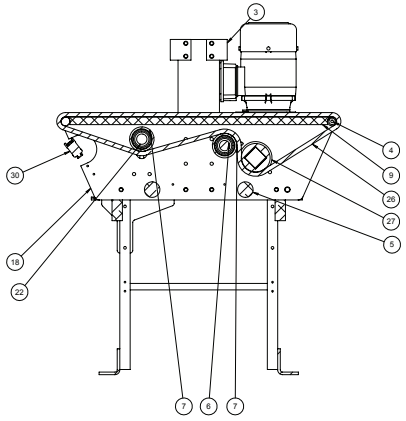

SECTION A-A

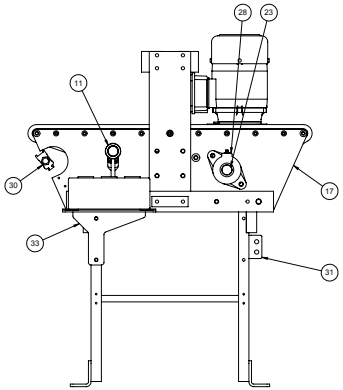

BILL OF MATERIALS

ITEM	QTY	NUMBER	DESCRIPTION
1	1	106765-001	OVER WRAP ADJ. NUT - RH
2	1	106765-002	OVER WRAP ADJ. NUT - RH
3	4	Default	TRACK GUIDE CLIP
4	1	106771	NOSE BAR, AIR
5	2	106777	CROSS MEMBER
6	1	106778	SHAFT, IDLER
7	2	231335-001	ROLLER, IDLER, BELT CONV
8	1	231349	BAR, NOSE, CONVEYOR, INTRALOX
9	1	231350	PLATE, BED, A = 27.50"
10	2	231393	GUIDE, CENTER
11	2	308115	WLDMT, SCREW, TAKE-UP, 1" 3/8-16 THREAD, 4.25 LG.
12	1	311656	SPECIAL WASHER
13	2	324935	ROD, CONNECT
14	2	324936	ANGLE, MTG, OVERWRAP
15	4	324937	BAR, VERT.
16	2	324938	BAR, MTG, CROSS
17	1	364027	PLT, SIDE, CONV. OVERWRAP
18	1	364027-001	PLT, SIDE, CONV. OVERWRAP, OPPOSITE
19	2	364028	BLK, TENSION, BELT
20	4	364029	BLK, MTG, TORQUE ARM
21	2	364030	BAR, MTG, OVERWRAP
22	1	364031	SHAFT, TAKE-UP, A = 32.75"
23	1	364032	SHAFT, DRIVE, OVERWRAP, A = 37.97", B = 13.00"
24	1	364035	PIN, LOCKING, 1.5"
25	2	807167	RING, SNAP, EXTERNAL, 2 1/16" SHAFT, BLACK OXIDE FINISH
26	5.25FT	826594	BELT, ACETAL, BLUE, FLUSH GRID, 23"W, NYLON RODS
27	7	826595	SPKT, 19T, 1-1/2 SQ BORE, 3.1 PD
28	2	827116	BRG, FLG, 1 ID, 2-BOLT, 3.89 BOLT CNTRS
29	1	870545	MOTOR-GEARBOX, 1/2 HP, 230/460V 60HZ, 175 RPM, HELICAL BEVEL, 3/4" DIA HOLLOW SHAFT, M4 MTG, TB4, CEII, W/TORQUE ARM
30	1	847059	STATIC BAR, IQ EASY, 22.06" EFF LG, 27.17" LG, WRT ANGLE CONNECTOR CABLE
31	1	Default	BKT, FITTING, GREASE
32	1	364673	WLDMNT, BKT, MTG, E-BOX
33	1	364673-001	WLDMNT, BKT, MTG, E-BOX

REV	DATE	BY	NOTE
B	11/18/2019	SRA	ADDED BRACKETS 364673 AND 364673-001, GEARMOTOR WAS 870544
A	9/16/2019	SRA	INCREASED QUANTITY OF 364029 FROM 1 TO 4

REVISIONS

NOTES
- INTERPRET PER ASME Y14.5M-1994.
- DIMENSIONS ARE IN INCHES [mm].
- DIMENSIONS IN PARENTHESES FOR REFERENCE ONLY.
- BREAK SHARP EDGES AND CORNERS.
- PROPRIETARY NOTICE: THIS INFORMATION IS THE PROPERTY OF ARPAC LLC AND SHALL NOT BE USED FOR ANY PURPOSE OTHER THAN THAT FOR WHICH IT WAS OBTAINED.
- CREATED IN SOLIDWORKS 2013.

ARPAC
6800 W. Irving Park Rd
Norridge (Chicago), 60706
www.arpac.com

S	FILE, CONFIG	324970/324970
S	DATE CREATED	Monday, April 15, 2013 6:38:13 AM
S	DATE UPDATED	Monday, November 18, 2019 11:31:14 AM
S	UPDATED BY	sanchez
-	DATE CREATED	Friday, May 6, 2016 12:30:34 PM
S	DATE UPDATED	Tuesday, December 17, 2019 1:59:44 PM
S	UPDATED BY	MFitch

SIZE: D	SCALE: 1:6	MATERIAL: SEE BILL OF MATERIALS	DESCRIPTION: ASSY, CONV, OVERWRAP
SRD ANGLE:	UNITS: INCH		
TOLERANCES: X.XX: ±1/32 X.XX: ±.015 X.XXX: ±.005 ANGLES: ±1°	FINISH: NONE		NUMBER: 324970

SHEET 1 OF 1

"C:\ARPAC_VAULT\Designs_BRANDPACK\BRT\W\324970.sldbrw" accessed Tuesday, December 17, 2019.

ARPAC B SIZE FORMAT R2.2

NOTES

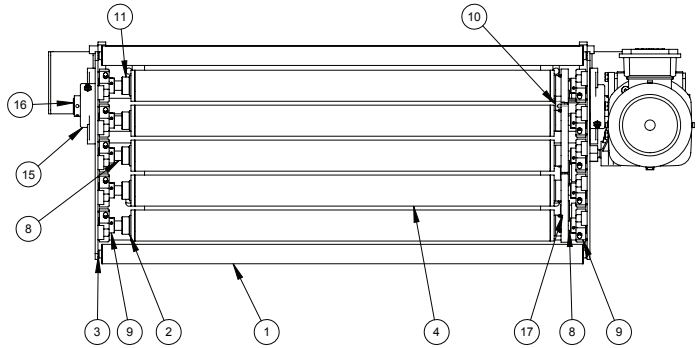

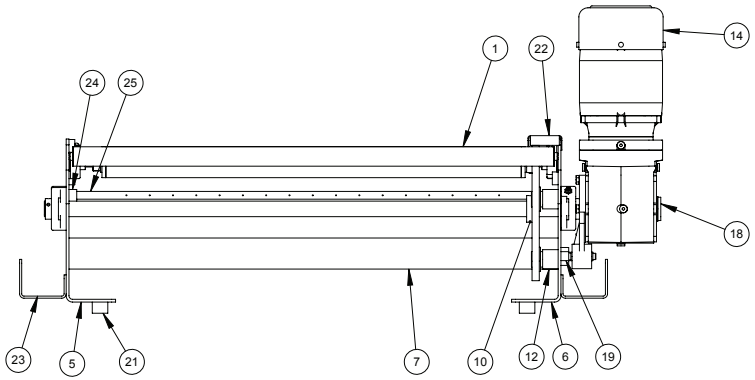

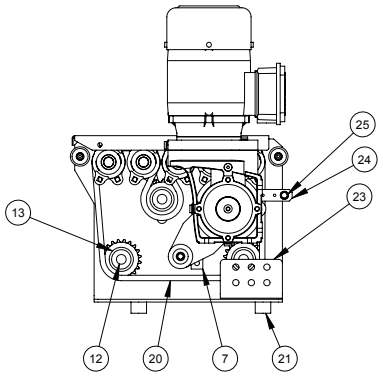

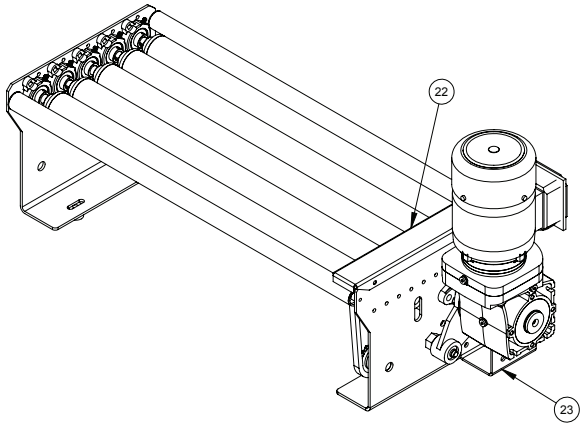

BILL OF MATERIALS

ITEM	QTY	NUMBER	DESCRIPTION
1	2	101806-059	RLR, IDL, AL, 1.25
2	10	800275-030	FSNR, WASHER, FLAT, 5/8, SAE HARDENED
3	2	101883-007	SHAFT, RLR, HEX, 5/16, TAPPED, 10-32, 31.500 LG 31.5 31.5
4	5	123689-006	ROLLER, SLIP
5	1	324969	PLT, SIDE, CONV
6	1	324969-001	PLT, SIDE, CONV
7	1	106743	XMBR, CONV, TRANSITION
8	5	218717	SHAFT, RLR, IDLER
9	10	827119	BRG, FLG, 5/8 ID, 2 BOLT
10	1	828561	SPKT, 35B18, MOD, 1.000 BORE
11	5	800560	COLLAR, SHAFT, SET SCREW, 5/8
12	3	324961	SPACER, SPKT, IDLER
13	3	800912	SPKT, 35BB20H, IDLER, 5/8 ID
14	1	870545	MOTOR-GEARBOX, 1/2 HP, 230/460V 60HZ, 175 RPM, HELICAL BEVEL, 3/4" DIA HOLLOW SHAFT, M4 MTG, TB4, CEII, W/TORQUE ARM
15	2	827116	BRG, FLG, 1 ID, 2-BOLT, 3.89 BOLT CNTRS
16	1	324954	DRIVE SHAFT
17	5	828560	SPKT, 35BS15-5/8, 5/8" BORE, 3/16" KW & 2 SS
18	1	311656	SPECIAL WASHER
19	1	324956	ROD, HEX STANDOFF, GEARBOX ANTI-ROTATION TORQUE ARM MTG., 1" HT SHOULDER
20	1	800459	CHAIN, RLR, #35, RLR RVT, (HANAGATA-G9000408)
21	4	140369-138	SPACER, 1" OD, 13/32 ID
22	1	324862	GUARD, CHAIN
23	2	324856	BKT, LUBRICATION, 6 POINTS
24	2	364668	BKT, MTG, AIR TUBE
25	1	364669	TUBE, AIR

REV	DATE	BY	NOTE
A	4/2/2020	SRA	ROLLER 123689-006 WAS 106740

REVISIONS

SIZE: B
SCALE: 1:8
3RD ANGLE
UNITS: INCH

TOLERANCES UNLESS OTHERWISE SPECIFIED
X/X: ±1/32
X.XX: ±.015
X.XXX: ±.005
ANGLES: ±1°

ARPAC
9555 W. Irving Park Rd
Schiller Park, IL 60176
www.arpac.com

NOTES
- INTERPRET PER ASME Y14.5M-1994.
- DIMENSIONS ARE IN INCHES [mm].
- DIMENSIONS IN PARENTHESES FOR REFERENCE ONLY.
- BREAK SHARP EDGES AND CORNERS.
- PROPRIETARY NOTICE: THIS INFORMATION IS THE PROPERTY OF ARPAC LLC AND SHALL NOT BE USED FOR ANY PURPOSE OTHER THAN THAT FOR WHICH IT WAS OBTAINED.
- CREATED IN SOLIDWORKS 2013.

FINISH

MATERIAL: SEE BILL OF MATERIALS

DESCRIPTION: ASSY, CONV, TRANSITION

NUMBER: 324983

FILE DETAILS

MODEL	FILE \ CONFIG	324983\324983
	SIMILAR TO	--
	DATE CREATED	Tuesday, April 9, 2013 5:06:00 AM
	DATE UPDATED	Thursday, April 2, 2020 3:06:43 PM
	UPDATED BY	sarcher
DRAFT	DATE CREATED	Thursday, April 7, 2016 1:16:29 PM
	DATE UPDATED	Thursday, April 2, 2020 3:06:44 PM
	UPDATED BY	sarcher

Accessed: Thursday, April 2, 2020
File: "C:\ARPAC_VAULT\Designs_BRANDPAC\BPTW\324983.slddrw"

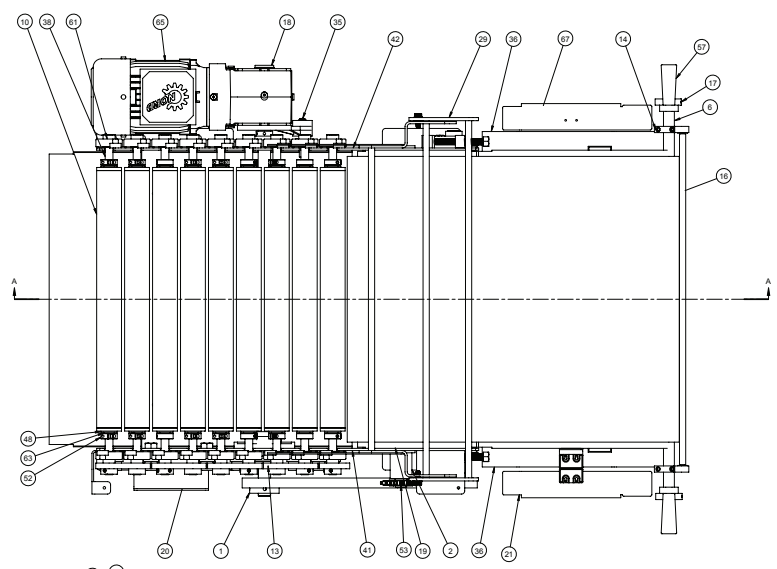

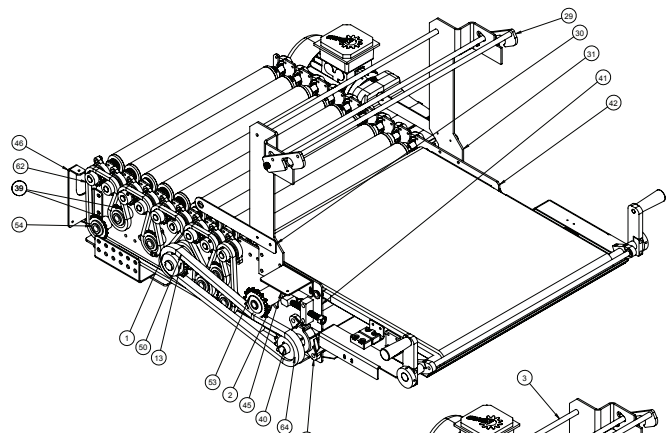

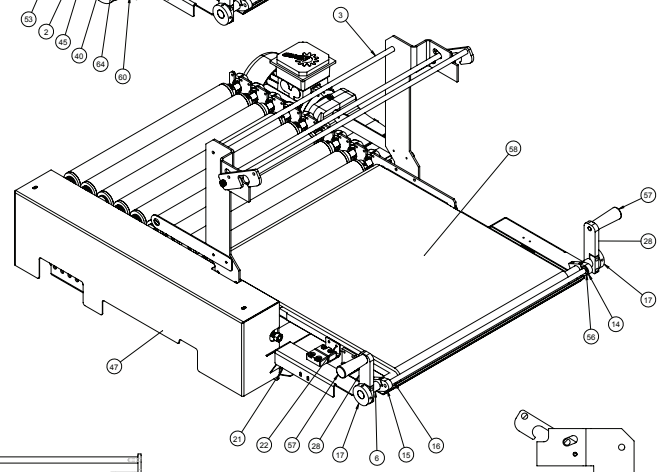

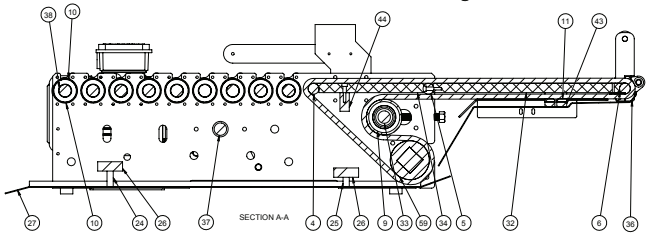

SECTION A-A

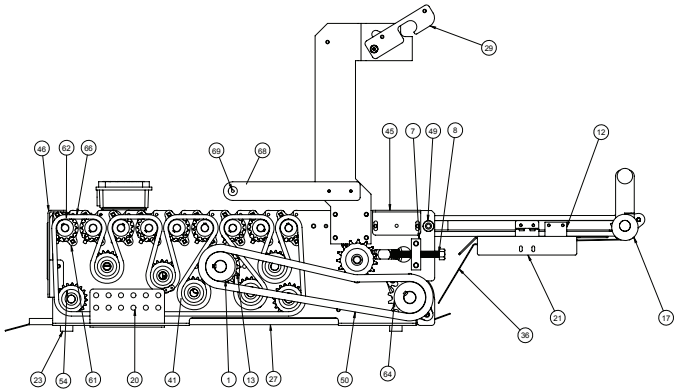

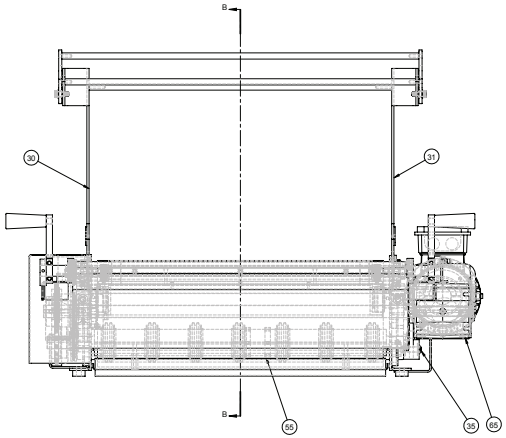

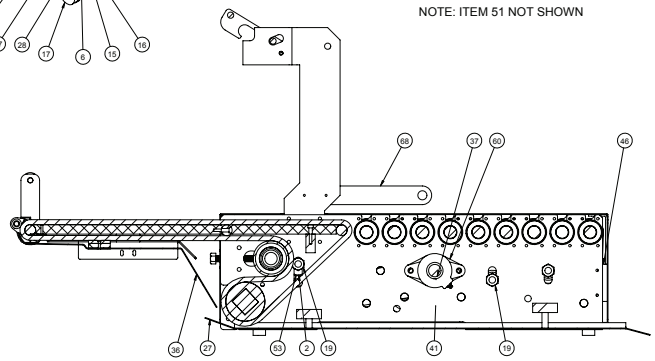

SECTION B-B

NOTE: ITEM 51 NOT SHOWN

BILL OF MATERIALS			
ITEM	QTY	NUMBER	DESCRIPTION
1	1	101825	SPKT, 50B15, MOD, 1.000 BORE
2	1	101835-018	SPACER, SPKT, IDL, 1.125 LG
3	1	101843-047	24.36
4	1	106704	BAR, NOSE, ENTRY
5	1	106706	SHAFT, PIVOT
6	1	106707	NOSE BAR, EXIT
7	2	106708	BLOCK, TAKE-UP
8	2	106709	BOLT, TAKE-UP
9	1	106717-000A	ROLLER, TAKE-UP
10	9	123689-001	ROLLER, SLIP
11	1	124553	STRIP, WEAR, BELT SUPPORT
12	2	124556	PLT, MTG, BELT, SUPPORT
13	1	124845	SPKT, 35B23, MOD, 1.000 BORE
14	1	192792-001	CLAMP, MTG, ROLLER, TRANSFER, LH
15	1	192792-002	CLAMP, MTG, ROLLER, TRANSFER, RH
16	1	192793	ROLLER, TRANSFER
17	2	274256	COLLAR, 7/8" BORE, EXCENTRIC
18	1	311656	SPECIAL WASHER
19	3	324863	NUT, 5/8-11, KEYED
20	2	324864	BKT, LUBRICATION, 12 POINT
21	1	364674	GUARD, KNIFE
22	1	324866	BKT, MAGNET
23	4	324870	SPACER, 1" OD, 13/32 ID
24	2	324872	SPACER, DRIP PAN
25	2	324872-001	SPACER, DRIP PAN, A= 0.75
26	2	324873	XMBR, PLT, BED
27	1	324874	PAN, DRIP, ACCE CONV
28	2	324875	CLAMP, MTG, NOSE BAR
29	1	324878	ASSY, LATCH
30	1	324945	LATCH, MTG
31	1	324945-001	LATCH, MTG
32	1	324946	PLATE, BED, PIVOT
33	1	324947	SHAFT, TAKE-UP
34	1	324948	PLATE, BED, STATIONARY
35	1	324949	ROD, HEX STAND-OFF, GEARBOX ANTI-ROTATION TORQUE ARM MTG, 1" HT SHOULDER
36	1	324951	PAN, DRIP, ACCEL
37	1	324955	SHAFT, DRIVE
38	9	324958	SHAFT, ROLLER
39	7	324961-002	SPACER, SPKT, IDLER
40	1	324984	SHAFT, SQ, DRIVE
41	1	324985	PLT, SIDE
42	1	324985-001	PLT, SIDE
43	1	357186	BAR, CROSS, BELT SUPPORT
44	1	357187	STIFFENER, PLT, BED, STATIONARY
45	1	364085	BKT, MTG, COVER, DRIVE, ACCEL CONV
46	1	364086	BKT, MTG, COVER, DRIVE, ACCEL CONV
47	1	364088	COVER, CHAIN, SLIP DRIVE, ACCEL CONV
48	18	800275-030	FSNR, WASHER, FLAT, 5/8, SAE HARDENED
49	2	800394	BUSH, OILITE, FLG, 0.502 X 0.627 X 1/2, 7/8 OD X 1/16 THK FLG
50	3.6FT	800468	CHAIN, RLR, #50
51	1	800515	LINK, CONN, #35,
52	18	800578	COLLAR, SHAFT, CLAMP, 1-PIECE, 5/8
53	1	800905	SPKT, 50BB15H, IDLER, 5/8 ID, HARDENED TEETH
54	7	800912	SPKT, 35BB20H, IDLER, 5/8 ID
55	2	800970	RETAINER RING, SELF SET, 1-1/2" SQ SHAFT SS C-TYPE WSETSC-REW
56	2	802789	BRG, CART, 1.14X11/16X5/16L,25/32 FLG OD, PRESS FIT ID-OD
57	2	809371	HANDLE, MACHINE, SOLID AL, CLEAR ANODIZED
58	1	826594	BELT, ACETAL, BLUE, FLUSH GRID, 23"W, NYLON RODS,
59	7	826595	SPKT, 19T, 1-1/2 SQ BORE, 3.1 PD
60	4	827116	BRG, FLG, 1 ID, 2-BOLT, 3.89 BOLT CNTRS
61	18	827119	BRG, FLG, 5/8 ID, 2 BOLT
62	9	828560	SPKT, 35BS15-5/8, 5/8" BORE, 3/16" KW & 2 SS
63	18	847054	SPRING, WASHER, TRIPLE-WAVE, 0.65ID, 0.86 OD, 0.01THI, 0.07HT
64	1	849655	SPKT, 50B16, MOD, 1.000 BORE
65	1	870863	MOTOR-GEARBOX, 3/4 HP; 230/460V 60HZ, 174 RPM, HELICAL BEVEL, 3/4" DIA HOLLOW SHAFT, M1,MTG,,TB2,,CEIL W/TORQUE ARM
66	1	800459	CHAIN, RLR, #35, RLR RVT
67	1	364674-001	GUARD, KNIFE
68	1	369662	PLT, MTG, PE
69	1	369663	PLT, MTG, REFLECTOR

REV	DATE	BY	NOTE
C	4/5/2021	SRA	QUANTITY FOR 324863 WAS 1
B	3/26/2020	SRA	REMOVED PART # 364083
A	1/29/20	SRA	ADDED GUARDS 364674 AND 364674-001, ADDED PLATES 369662 AND 369663

REVISIONS

NOTES
- INTERPRET PER ASME Y14.5M-1994.
- DIMENSIONS ARE IN INCHES [mm].
- DIMENSIONS IN PARENTHESES FOR REFERENCE ONLY.
- BREAK SHARP EDGES AND CORNERS.
- PROPRIETARY NOTICE: THIS INFORMATION IS THE PROPERTY OF ARPAC LLC AND SHALL NOT BE USED FOR ANY PURPOSE OTHER THAN THAT FOR WHICH IT WAS OBTAINED.
- CREATED IN SOLIDWORKS 2013.

ARPAC
8800 W. Irving Park Rd
Schiller Park, IL 60176
www.arpac.com

S	FILE / CONFIG	324986\324986
S	DATE CREATED	Monday, March 19, 2012 5:14:24 PM
S	DATE UPDATED	Monday, April 5, 2021 9:18:11 AM
S	UPDATED BY	sandhar
-	DATE CREATED	Monday, May 16, 2016 10:26:24 AM
S	DATE UPDATED	Monday, April 5, 2021 9:08:20 AM
S	UPDATED BY	sandhar

SIZE: D
SCALE: 1:5
MATERIAL: SEE BILL OF MATERIALS
3RD ANGLE
UNITS: INCH
TOLERANCES: XX: ±1/32 X.XX: ±.015 X.XXX: ±.005 ANGLES: ±1°
FINISH: NONE
DESCRIPTION: ASSY, CONV, ACCELERATION BPTW, HABASIT
NUMBER: 324986

SHEET 1 OF 1

"C:\mVenia_Vault\Designs_BRANDPACK\P19\324986.sldcfm" accessed Monday, April 5, 2021.

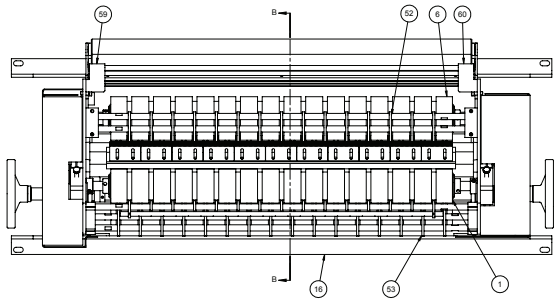

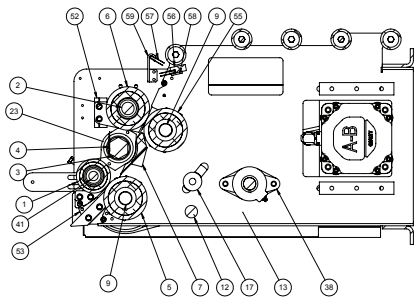

SECTION B-B

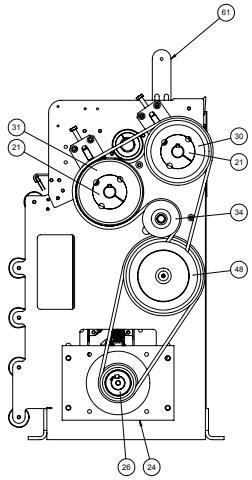

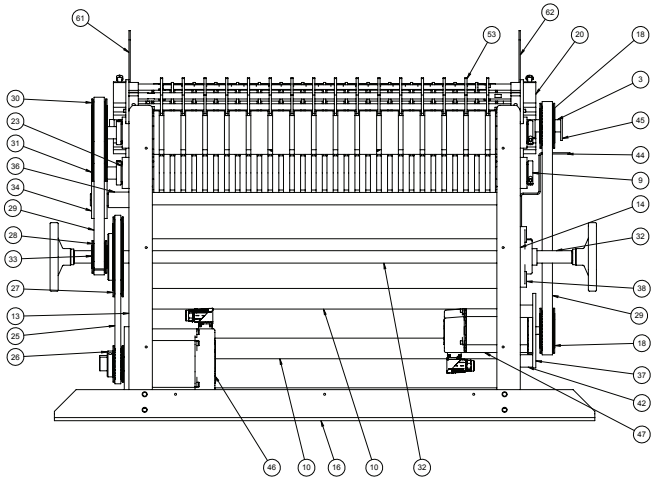

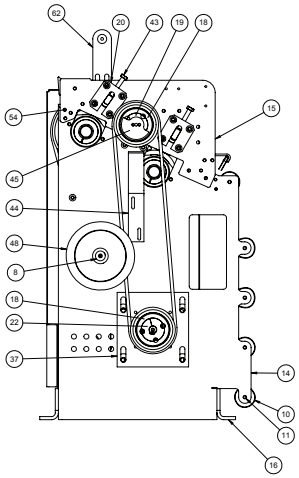

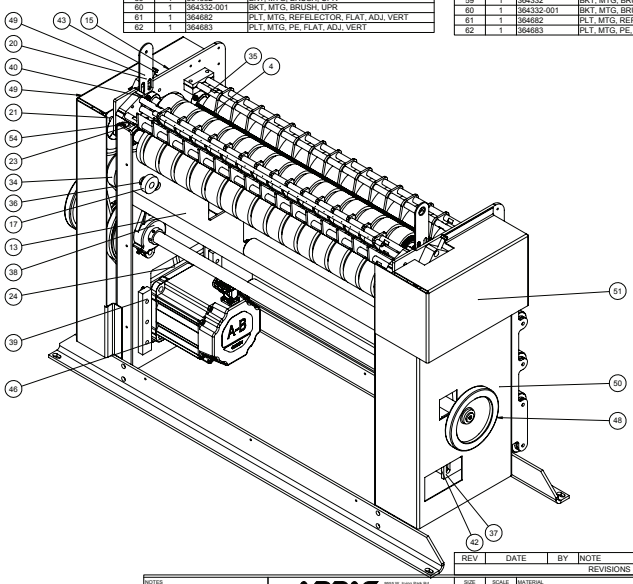

325893-001		BILL OF MATERIALS	
ITEM	QTY	NUMBER	DESCRIPTION
1	1	238437-002	ROLLER, TENSION, UPPER
2	1	225602-005	SHAFT, RLR, PINCH, LWR
3	1	264315-002	SHAFT, KNIFE, HEX
4	13	137619	BLADE, TITANIUM NITRIDE COATING
5	1	111429-001	RLR, DRIVE, UPR
6	1	324803-001	ROLLER, LOWER, PINCH, 2ND, 27 1/2 LG
7	1	325898-001	ASSY, TABLE, KNIFE, BPTW
8	2	809370	FSNR, WASHER, C'SINK, 4MM, TYPE GN184
9	2	225630-002	SHFT, DRIVE
10	5	111467-006	RLR, IDL, AL, 1.660, 38 3/8 LG
11	5	101811-375	SHAFT, RLR, HEX, 7/16, TAPPED 1/4-20
12	1	223946-005	XMEMBER
13	1	325894	PLT, SIDE, LWR, RH
14	1	325895	PLT, SIDE, LWR, LH
15	2	325923	PLT, SUPPORT, ROLLER, PINCH, UPR
16	2	326204-001	ANGLE, MTG, FILM FEED
17	1	203803	NUT, ADJ, 5/8-11
18	2	823123	PULLEY, TIMING, 32T, 8MM P, 21MM W, 1210 BUSHING REQUIRED
19	1	803982	BUSH, 1210, TAPER, 1 BORE X 1 LG
20	4	324809	GUIDE, ROLLER, PINCH
21	3	810527	BUSH, TAPER, 2012, 1" BORE, WITH KEYWAY
22	1	825158	BUSH, 1210, TAPER, 16MM BORE
23	6	141701	BEARING MOD. SFT-16T BPMP-45/70
24	1	231281	PLT, MNT, MOTOR
25	1	806316-001	BELT, TIMING, 8MM P, 12MM W, 800MM LG
26	1	251968	PULLEY, TIMING, 25T, 8MM P, 12MM W, MOD, 28MM BORE
27	1	810310	PULLEY, 8MX-60S-12
28	1	810315	PULLEY, TIMING,22T,8MM P,21MM W USED W/ #1008 TAPER LOCK BUSHING
29	2	807118	BELT, TIMING, 8MM P, 21MM W, 1120MM LG
30	1	810586	PULLEY, TIMING, 50T, 8MM P, 21MM W, #2012 TAPER-LOCK BUSHING REQUIRED
31	1	825159	PULLEY, TIMING, 53T, 8MM P, 21MM W, #2012 TAPER-LOCK BUSHING REQUIRED
32	1	325926-001	SHAFT, JACK, FEED, FILM
33	1	819507	BUSH, TAPER-LOCK, 1008, 1.000 BORE
34	1	238479	PULLEY, IDL, 21MM BELT, BPTW-5401
35	2	800559	COLLAR, SHAFT, SET SCREW, 1
36	1	224000-007	SPCR, AL, 21/32 ID X 1-1/4 OD, 1.664 LG
37	1	263994	PLT, MTG, AB MOTOR
38	2	827116	BRG, FLG, 1 ID, 2-BOLT, 3.89 BOLT CNTRS
39	2	229255	PLT, MNT
40	2	800562	COLLAR, SHAFT, SET SCREW, 3/4 STL
41	1	238458-003	SHAFT, RLR, PINCH, UPPER
42	4	140369-125	SPACER, 1 OD X 13/32 ID X 1.000 LG
43	4	800280-016	FSNR, HHCS, 5/16-18 X 1-3/4
44	1	274203	ANGLE, PROX
45	1	251609	CAM, PROX, HOME, CRS
46	1	849461	MOTOR, SERVO, 101 IN-LB, 4500 RPM, 460VAC, KINETIX 5500 CONTROLLER
47	1	849316	MOTOR, SERVO, 37 IN-LB, 4750 RPM 460VAC, KINETIX 5500 CONTROLLER
48	2	809078	HD.WH, SAFETY, W/CPLG, 5/8 B., 5 1/2OD
49	1	326193	GUARD, BELT, FILM FEED
50	1	326194	GUARD, BELT, FILM FEED
51	1	326195	GUARD, BELT, FILM FEED, UPR
52	1	357112-001	ASSY, FINGER, GUIDE, FILM, ENTRY
53	1	357116-001	ASSY, GUIDE, FILM, EXIT
54	4	800322-010	FSNR, BOLT, SHLDR, 5/16 DIA X 1/4 LG
55	1	111428-003	ROLLER, RUBBER, PINCH
56	1	364331	BAR, MTG, BRUSH
57	2	806783-002	BRUSH, ELIMINATING, STATIC 36" LONG WITH .75" LONG CARBON FIBER
58	3	223945	PLT, CLAMP, BRUSH
59	1	364332	BKT, MTG, BRUSH, UPR
60	1	364332-001	BKT, MTG, BRUSH, UPR
61	1	364682	PLT, MTG, REFELECTOR, FLAT, ADJ, VERT
62	1	364683	PLT, MTG, PE, FLAT, ADJ, VERT

325893		BILL OF MATERIALS	
ITEM	QTY	NUMBER	DESCRIPTION
1	1	238437	ROLLER, TENSION, UPPER
2	1	225602-002	SHAFT, RLR, PINCH, LWR
3	1	264315	SHAFT, KNIFE, HEX
4	11	137619	BLADE, TITANIUM NITRIDE COATING
5	1	111429	ROLLER, DRIVE, UPPER BPTW-5401
6	1	324803	ROLLER, LOWER, PINCH, 27 1/2 LG, BPTW-70
7	1	325898	ASSY, TABLE, KNIFE, BPTW
8	2	809370	FSNR, WASHER, C'SINK, 4MM, TYPE GN184
9	2	225630-004	SHAFT, DRIVE, CRS, 1.00 OD, 35.50 LG
10	5	111467-016	RLR, IDL, AL, 1.660, 30 1/2 LG
11	5	101811-365	SHAFT, RLR, HEX, 7/16, TAPPED 1/4-20, 31 9/64 LG
12	1	223946-004	XBAR, ROD, 1.000, TAPPED, 1/4-20, 31 9/64 LG
13	1	325894	PLT, SIDE, LWR, RH
14	1	325895	PLT, SIDE, LWR, LH
15	2	325923	PLT, SUPPORT, ROLLER, PINCH, UPR
16	2	326204	ANGLE, MTG, FILM FEED
17	1	203803	NUT, ADJ, 5/8-11
18	2	823123	PULLEY, TIMING, 32T, 8MM P, 21MM W, 1210 BUSHING REQUIRED
19	1	803982	BUSH, 1210, TAPER, 1 BORE X 1 LG
20	4	324809	GUIDE, ROLLER, PINCH
21	3	810527	BUSH, TAPER, 2012, 1" BORE, WITH KEYWAY
22	1	825158	BUSH, 1210, TAPER, 16MM BORE
23	6	141701	BEARING MOD. SFT-16T BPMP-45/70
24	1	231281	PLT, MNT, MOTOR
25	1	806316-001	BELT, TIMING, 8MM P, 12MM W, 800MM LG
26	1	251968	PULLEY, TIMING, 25T, 8MM P, 12MM W, MOD, 28MM BORE
27	1	810310	PULLEY, 8MX-60S-12
28	1	810315	PULLEY, TIMING,22T,8MM P,21MM W USED W/ #1008 TAPER LOCK BUSHING
29	2	807118	BELT, TIMING, 8MM P, 21MM W, 1120MM LG
30	1	810586	PULLEY, TIMING, 50T, 8MM P, 21MM W, #2012 TAPER-LOCK BUSHING REQUIRED
31	1	825159	PULLEY, TIMING, 53T, 8MM P, 21MM W, #2012 TAPER-LOCK BUSHING REQUIRED
32	1	325926	SHAFT, JACK, FEED, FILM
33	1	819507	BUSH, TAPER-LOCK, 1008, 1.000 BORE
34	1	238479	PULLEY, IDL, 21MM BELT, BPTW-5401
35	2	800559	COLLAR, SHAFT, SET SCREW, 1
36	1	224000-007	SPCR, AL, 21/32 ID X 1-1/4 OD, 1.664 LG
37	1	263994	PLT, MTG, AB MOTOR
38	2	827116	BRG, FLG, 1 ID, 2-BOLT, 3.89 BOLT CNTRS
39	2	229255	PLT, MNT
40	2	800562	COLLAR, SHAFT, SET SCREW, 3/4 STL
41	1	238458	SHAFT,RLR,PINCH,UPPER
42	4	140369-125	SPACER, 1 OD X 13/32 ID X 1.000 LG
43	4	800280-016	FSNR, HHCS, 5/16-18 X 1-3/4
44	1	274203	ANGLE, PROX
45	1	251609	CAM, PROX, HOME, CRS
46	1	849461	MOTOR, SERVO, 101 IN-LB, 4500 RPM, 460VAC, KINETIX 5500 CONTROLLER
47	1	849316	MOTOR, SERVO, 37 IN-LB, 4750 RPM 460VAC, KINETIX 5500 CONTROLLER
48	2	809078	HD.WH, SAFETY, W/CPLG, 5/8 B., 5 1/2OD
49	1	326193	GUARD, BELT, FILM FEED
50	1	326194	GUARD, BELT, FILM FEED
51	1	326195	GUARD, BELT, FILM FEED, UPR
52	1	357112	ASSY, FINGER, GUIDE, FILM, ENTRY
53	1	357116	ASSY, GUIDE, FILM, EXIT
54	4	800322-010	FSNR, BOLT, SHLDR, 5/16 DIA X 1/4 LG
55	1	111428	ROLLER, RUBBER, PINCH
56	1	364331-001	BAR, MTG, BRUSH
57	2	806783-002	BRUSH, ELIMINATING, STATIC 36" LONG WITH .75" LONG CARBON FIBER
58	3	223945	PLT, CLAMP, BRUSH
59	1	364332	BKT, MTG, BRUSH, UPR
60	1	364332-001	BKT, MTG, BRUSH, UPR
61	1	364682	PLT, MTG, REFELECTOR, FLAT, ADJ, VERT
62	1	364683	PLT, MTG, PE, FLAT, ADJ, VERT

REV	DATE	BY	NOTE
			REVISIONS

NOTES
- INTERPRET PER ASME Y14.5M-1994.
- DIMENSIONS ARE IN INCHES [mm].
- DIMENSIONS IN PARENTHESES FOR REFERENCE ONLY.
- BREAK SHARP EDGES AND CORNERS
- PROPRIETARY NOTICE: THIS INFORMATION IS THE PROPERTY OF ARPAC LLC AND SHALL NOT BE USED FOR ANY PURPOSE OTHER THAN THAT FOR WHICH IT WAS OBTAINED.
- CREATED IN SOLIDWORKS 2013.

ARPAC
6800 W. Irving Park Rd
Norridge (Chicago), 60706
www.arpac.com

S	FILE / CONFIG	325893/325893
E	DATE CREATED	Wednesday, April 17, 2013 6:51:02 AM
S	DATE UPDATED	Wednesday, November 6, 2019 3:16:06 PM
S	UPDATED BY	ring
–	DATE CREATED	Wednesday, July 20, 2016 10:27:59 AM
S	DATE UPDATED	Wednesday, November 6, 2019 3:16:22 PM
S	UPDATED BY	ring

SIZE	SCALE	MATERIAL
D	1:5	SEE BILL OF MATERIALS
SRC ANGLE	UNITS	
	INCH	
TOLERANCES: X.XX: ±1/32 X.XXX: ±.015 X.XXX: ±.005 ANGLES: ±1°		FINISH: NONE

DESCRIPTION
ASSY, FILM FEED, SERVO KNIFE, 26" WIDE FILM, AB VPL, ~~SERVOMOTORS, BPTW~~

325893

SHEET 1 OF 1

"C:\ARPAC_VAULT\Designs_BRANDPAC\BPTW\325893.sldbw" accessed Wednesday, November 6, 2019.

PART #	A	B
325898	31.141	27.00
325898-001	37.141	33.00

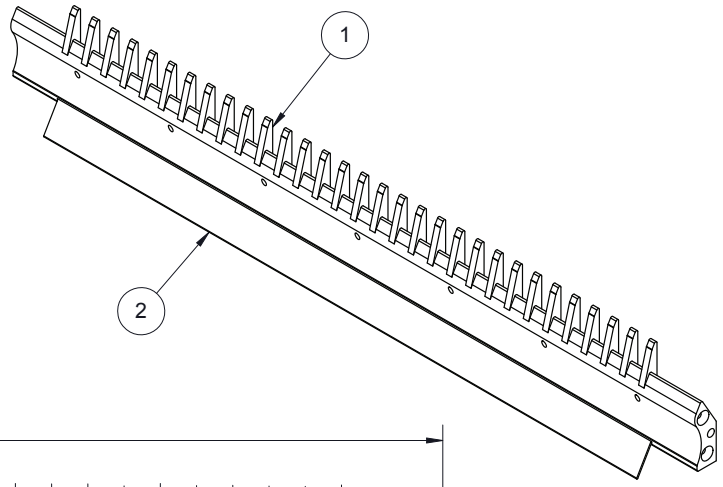

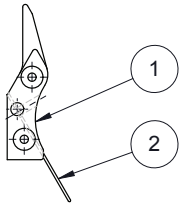

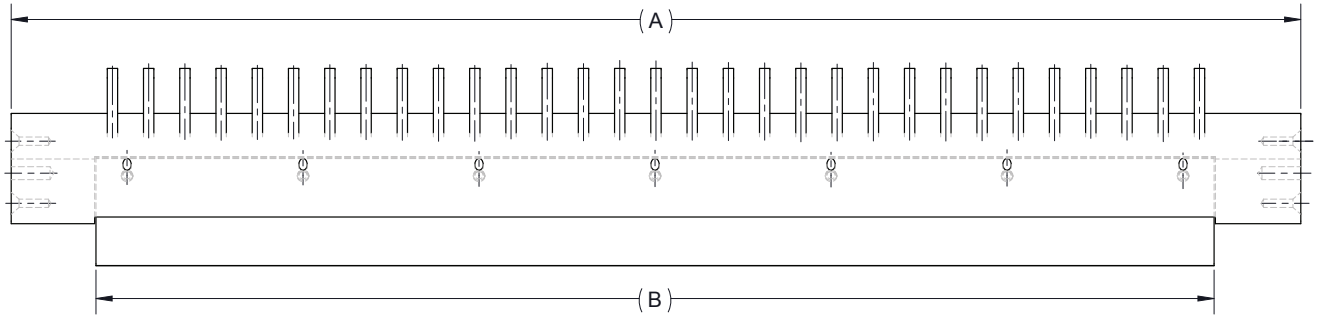

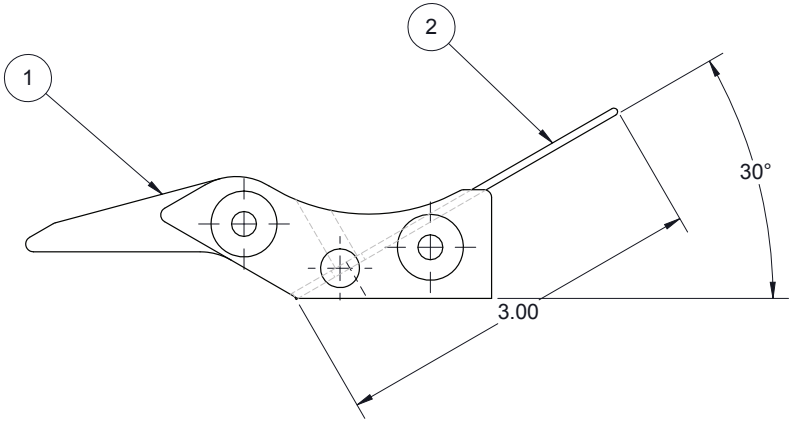

ITM	QTY	PART NUM	DESCRIPTION
2	1	129925	SS SHEET 16GA EMBOSSED, 5WL PATTERN, 304, 2B FINISH
1	1	325897	TABLE, KNIFE, BPTW

BILL OF MATERIALS

ARPAC
9511 WEST RIVER ST.
SCHILLER PARK, IL 60176

UNLESS OTHERWISE SPECIFIED ALL DIMENSIONAL TOLERANCES:

FRACTIONS	± 1/64
TWO (2) DECIMALS	± 0.010
THREE (3) DECIMALS	± 0.005
ANGLES	± 0.5°

DRAWN: 4/21/2004 BY: SRA SCALE: 1:3 SIZE: B

FILENAME: 325898

DESCRIPTION: ASSY, TABLE, KNIFE, BPTW

DRAWING NUMBER: 325898

ARPAC B SIZE FORMAT R4

BILL OF MATERIALS			
ITEM	QTY	NUMBER	DESCRIPTION
A 1	2	370026	BLK, MTG, BRUSH
B 2	2	370599	BAR, MTG, BRUSH, STATIC
3	2	806783-002	BRUSH, ELIMINATING, STATIC 36" LONG WITH .75" LONG CARBON FIBER
4	6	223945	PLT, CLAMP, BRUSH

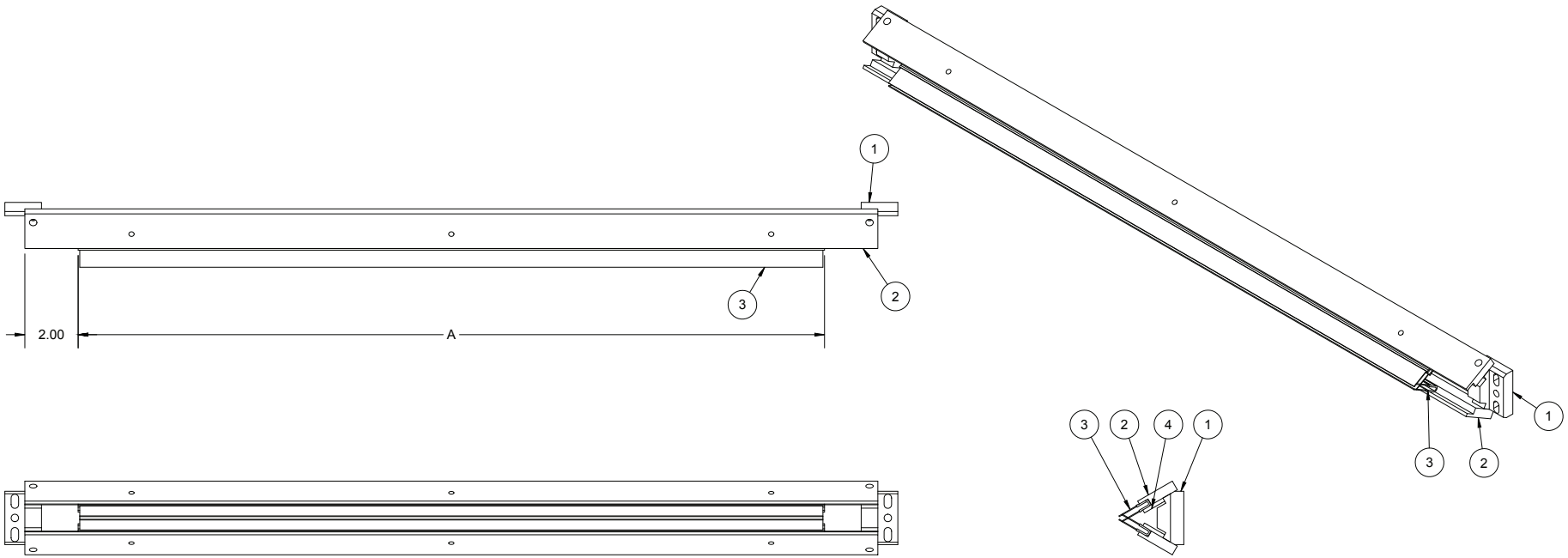

PART NUMBER	A
325958	28
325958-001	34

REV	DATE	BY	NOTE
B	2/17/2020	SRA	370599 WAS 325957, ADDED 223945
A	1/22/2020	SRA	370026 WAS 294171

REVISIONS

NOTES
- INTERPRET PER ASME Y14.5M-1994.
- DIMENSIONS ARE IN INCHES [mm].
- DIMENSIONS IN PARENTHESES FOR REFERENCE ONLY.
- BREAK SHARP EDGES AND CORNERS.
- PROPRIETARY NOTICE: THIS INFORMATION IS THE PROPERTY OF ARPAC LLC AND SHALL NOT BE USED FOR ANY PURPOSE OTHER THAN THAT FOR WHICH IT WAS OBTAINED.
- CREATED IN SOLIDWORKS 2013.

ARPAC
9555 W. Irving Park Rd
Schiller Park, IL 60176
www.arpac.com

MODEL	FILE \ CONFIG	325958\325958
	SIMILAR TO	--
	DATE CREATED	Friday, April 22, 2016 12:03:15 PM
	DATE UPDATED	Monday, February 17, 2020 2:25:51 PM
	UPDATED BY	sarcher
DRAFT	DATE CREATED	Monday, July 25, 2016 3:14:22 PM
	DATE UPDATED	Monday, February 17, 2020 2:25:38 PM
	UPDATED BY	sarcher

SIZE: B
SCALE: 1:4
3RD ANGLE
UNITS: INCH
TOLERANCES
X/X: ±1/32
X.XX: ±.015
X.XXX: ±.005
ANGLES: ±1°

MATERIAL: SEE BILL OF MATERIALS
FINISH: NONE

DESCRIPTION: ASSY, BRUSH, ELIMINATION, STATIC
NUMBER: 325958

"C:\ARPAC_VAULT\Designs_BRANDPAC\BPTW\325958.slddrw" accessed Monday, February 17, 2020.

ARPAC15.B2 FORMAT.frt

342601 BILL OF MATERIALS			
ITEM	QTY	NUMBER	DESCRIPTION
1	1	324968	ASSY, DANCER, BPTW
2	1	111467-008	RLR, IDL, AL, 1.660, 30 5/8 LG
3	1	322675	ASSY, REGISTRATION, PRINT, FILM
4	1	325941	BKT, MTG, RLR
5	1	325941-001	BKT, MTG, RLR
6	1	101811-278	SHAFT, RLR, HEX, 7/16, TAPPED 1/4-20,31.234 L, FRAME WIDTH, SEAL WIDTH
7	1	325958	ASSY, BRUSH, ELIMINATION, STATIC

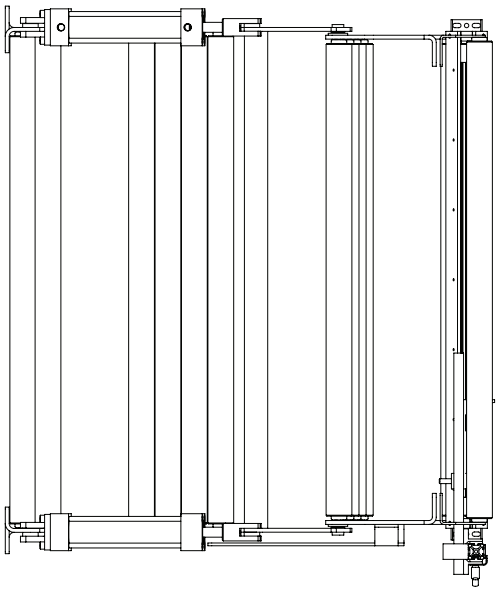

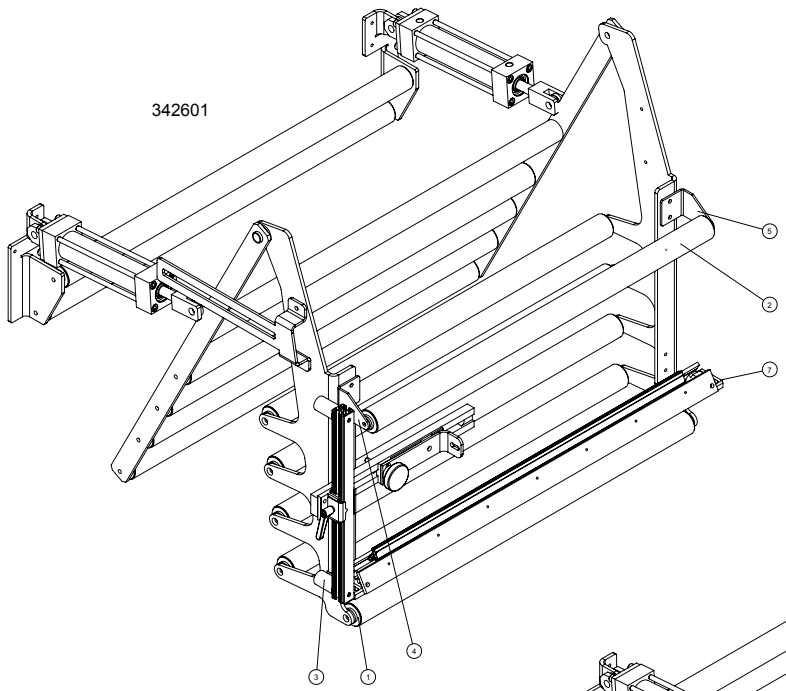

7	1	325958-001	ASSY, BRUSH, ELIMINATION, STATIC, 32" FILM
6	1	101811-281	SHAFT, RLR, HEX, 7/16, TAPPED 1/4-20,37.234375 L, FRAME WIDTH, SEAL WIDTH
5	1	325941-001	BKT, MTG, RLR
4	1	325941	BKT, MTG, RLR
3	1	322675	ASSY, REGISTRATION, PRINT, FILM
2	1	111467-012	RLR, IDL, AL, 1.660, 36 5/8 LG
1	1	324968-001	ASSY, DANCER BPMP, BPTW
ITM	QTY	PART NUM	DESCRIPTION
342601-001		BILL OF MATERIALS	

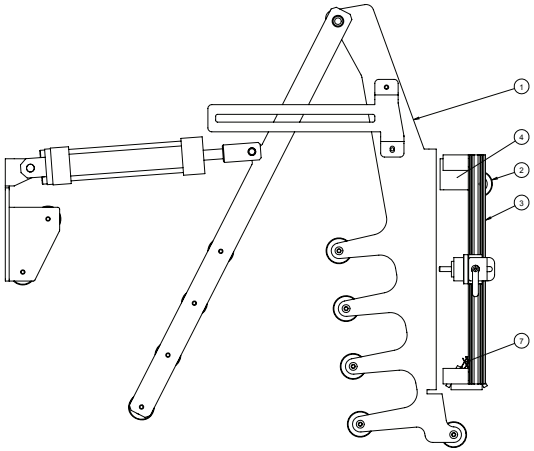

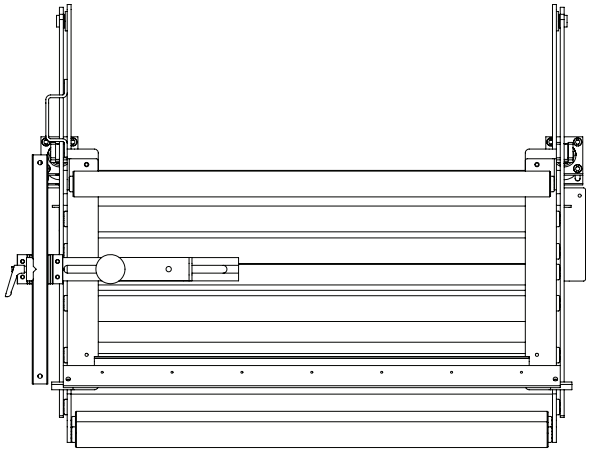

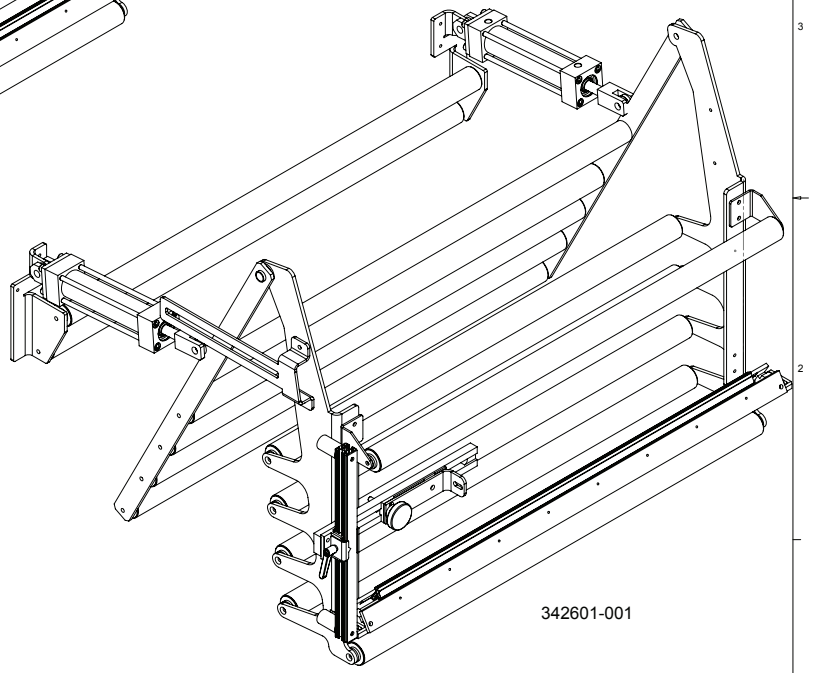

REV	DATE	BY	NOTE
REVISIONS			

NOTES
- INTERPRET PER ASME Y14.5M-1994.
- DIMENSIONS ARE IN INCHES [mm].
- DIMENSIONS IN PARENTHESES FOR REFERENCE ONLY.
- BREAK SHARP EDGES AND CORNERS
- PROPRIETARY NOTICE: THIS INFORMATION IS THE PROPERTY OF ARPAC LLC AND SHALL NOT BE USED FOR ANY PURPOSE OTHER THAN THAT FOR WHICH IT WAS OBTAINED.
- CREATED IN SOLIDWORKS 2013.

CREATED IN SOLIDWORKS 2013

1	FILE I.CONFIG SIMILAR TO	342601342601
2	DATE CREATED	Friday, April 22, 2016 8:23:13 AM
3	DATE UPDATED	Wednesday, January 22, 2020 3:49:56 PM
3	UPDATED BY	sandher
4	DATE CREATED	Monday, November 6, 2017 11:34:25 AM
5	DATE UPDATED	Wednesday, January 22, 2020 3:49:57 PM
5	UPDATED BY	sandher

ARPAC A BRADBURY COMPANY
8800 W. Irving Park Rd.
Schiller Park IL 60176
www.arpac.com

SIZE	SCALE	MATERIAL	DESCRIPTION
D	1:4	SEE BILL OF MATERIALS	ASSY, FILM THREADING
3RD ANGLE	UNITS		
	INCH		
TOLERANCES: XX: ±1/32 X.XX: ±.015 X.XXX: ±.005 ANGLES: ±1°		FINISH: NONE	NUMBER: 342601

"C:\ARPAC_VAULT\Designs_BRANDPAC\BPTW\342601.sldbw" accessed Wednesday, January 22, 2020.

SHEET 1 OF 1

ARPAC B SIZE FORMAT R4

BILL OF MATERIALS			
ITEM	QTY	NUMBER	DESCRIPTION
1	2	326316-002	SHAFT, MTG, FINGER, GUIDE
2	28	357111	SPACER, FINGER, GUIDE, FILM
3	15	357108	PLT, FINGER, GUIDE, FILM, ENTRY
4	4	362277-002	SHAFT, SUPPORT, GUIDE
5	2	324800	BLK, CLAMP, SHAFT

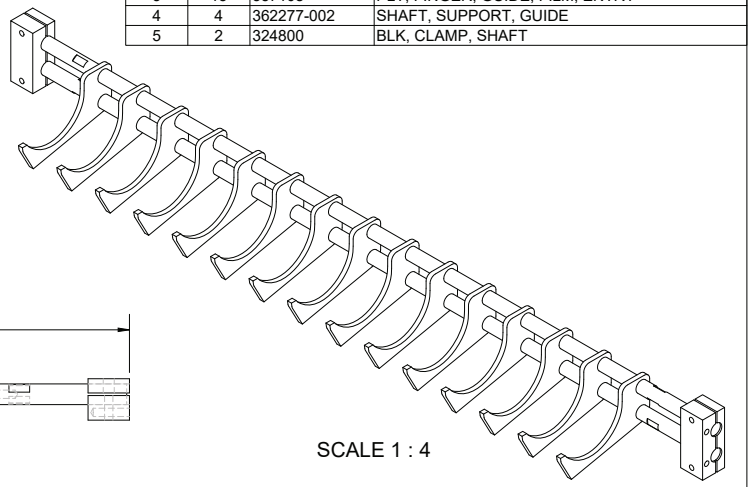

SCALE 1 : 4

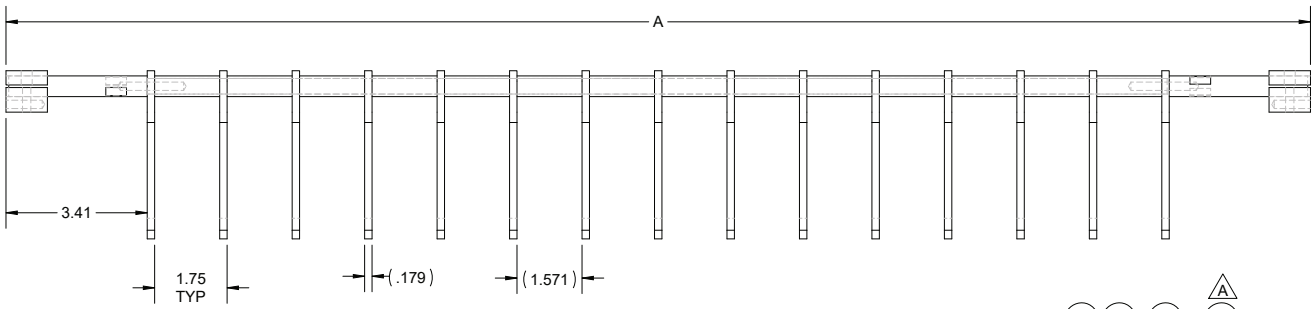

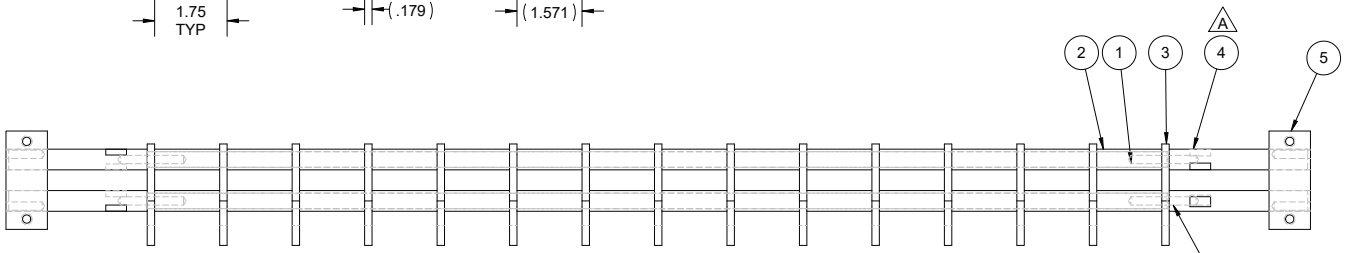

USE 1/4-20 SET SCREW TO CONNECT ITEMS 1 AND 4

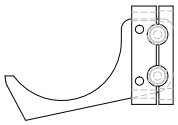

REV	DATE	BY	NOTE
A	11/9/2018	SRA	ITEM 4 WAS PART # 326317-002

REVISIONS

PART #	A	ITEM 4
357112	31.50	362277-002
357112-001	37.50	362277-005

NOTES
- INTERPRET PER ASME Y14.5M-1994.
- DIMENSIONS ARE IN INCHES [mm].
- DIMENSIONS IN PARENTHESES FOR REFERENCE ONLY.
- BREAK SHARP EDGES AND CORNERS.
- PROPRIETARY NOTICE: THIS INFORMATION IS THE PROPERTY OF ARPAC LLC AND SHALL NOT BE USED FOR ANY PURPOSE OTHER THAN THAT FOR WHICH IT WAS OBTAINED.
- CREATED IN SOLIDWORKS 2013.

ARPAC
9555 W. Irving Park Rd
Schiller Park, IL 60176
www.arpac.com

MODEL	FILE \ CONFIG	357112\357112
	SIMILAR TO	--
	DATE CREATED	Thursday, May 12, 2016 3:09:02 PM
	DATE UPDATED	Tuesday, March 5, 2019 1:32:51 PM
	UPDATED BY	hhg
DRAFT	DATE CREATED	Tuesday, May 17, 2016 5:23:10 PM
	DATE UPDATED	Tuesday, March 5, 2019 1:32:52 PM
	UPDATED BY	hhg

SIZE	SCALE	MATERIAL	DESCRIPTION
B	1:3	SEE BILL OF MATERIALS	ASSY, FINGER, GUIDE, FILM, ENTRY
3RD ANGLE	UNITS		
	INCH		
TOLERANCES		FINISH	NUMBER
X/X: ±1/32 X.XX: ±.015 X.XXX: ±.005 ANGLES: ±1°		NONE	357112

"C:\ARPAC_VAULT\Designs\350000\357000\357112.slddrw" accessed Tuesday, March 5, 2019.

SHEET 1 OF 1

ARPAC B SIZE FORMAT R4

PART#	A	B	ITEM 1	ITEM 2	ITEM 3
357114	31.37	3.34	326316-002	362277-002	213275
357114-001	37.37	2.84	326316-007	362277-005	213275-001

BILL OF MATERIALS

ITEM	QTY	NUMBER	DESCRIPTION
1	2	326316-002	SHAFT, MTG, FINGER, GUIDE
2	4	362277-002	SHAFT, SUPPORT, GUIDE
3	1	213275	TBG, GUIDE, FILM
4	28	357111	SPACER, FINGER, GUIDE, FILM
5	13	357113	PLATE, FINGER, GUIDE, FILM, UPPER
6	2	357110	PLT, FINGER, GUIDE, FILM, EXIT, TOP

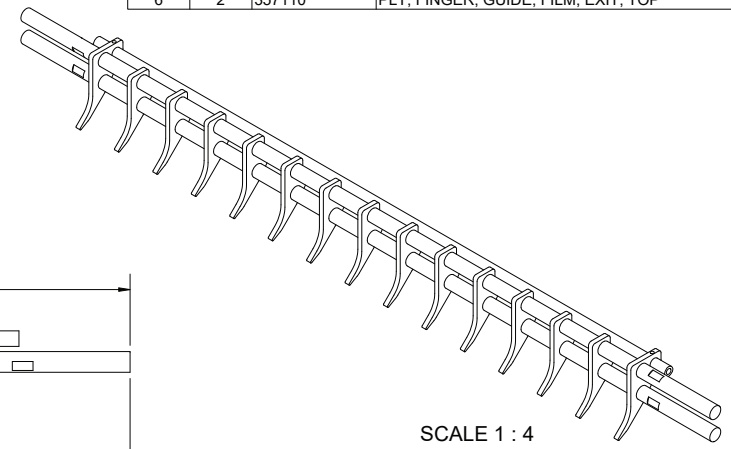

SCALE 1 : 4

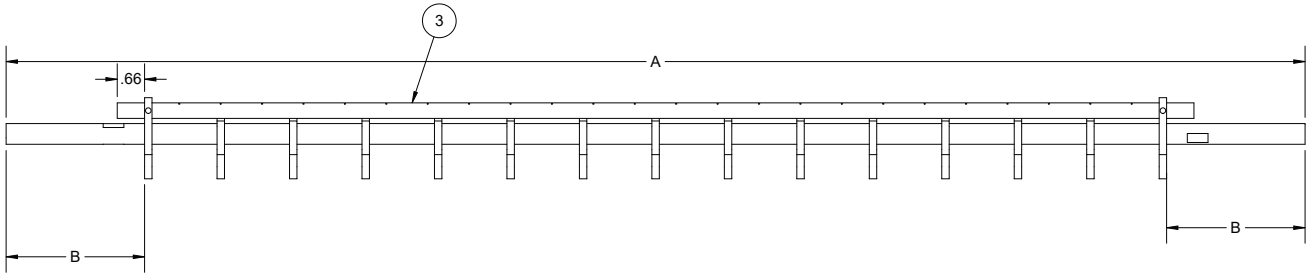

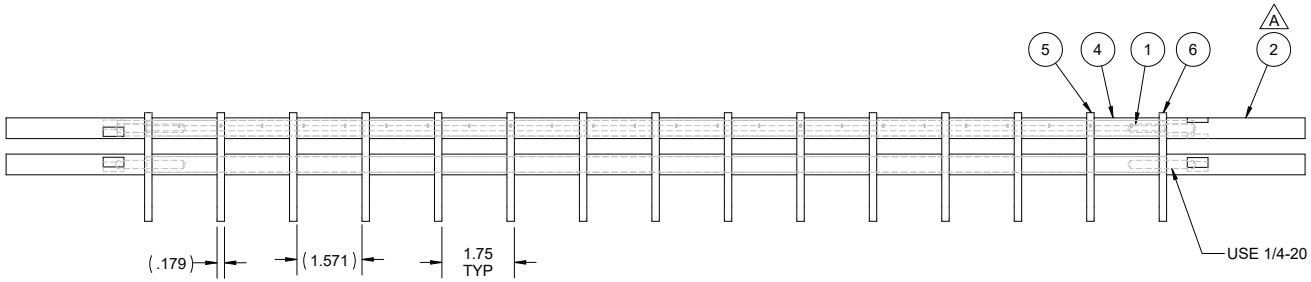

USE 1/4-20 SET SCREW TO CONNECT ITEMS 1 AND 2

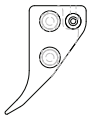

REV	DATE	BY	NOTE
A	11/9/2018	SRA	ITEM 2 PART # WAS 326317-002

REVISIONS

NOTES
- INTERPRET PER ASME Y14.5M-1994.
- DIMENSIONS ARE IN INCHES [mm].
- DIMENSIONS IN PARENTHESES FOR REFERENCE ONLY.
- BREAK SHARP EDGES AND CORNERS.
- PROPRIETARY NOTICE: THIS INFORMATION IS THE PROPERTY OF ARPAC LLC AND SHALL NOT BE USED FOR ANY PURPOSE OTHER THAN THAT FOR WHICH IT WAS OBTAINED.
- CREATED IN SOLIDWORKS 2013.

ARPAC
9555 W. Irving Park Rd
Schiller Park, IL 60176
www.arpac.com

MODEL	FILE \ CONFIG	357114\357114
	SIMILAR TO	--
	DATE CREATED	Thursday, May 12, 2016 1:47:25 PM
	DATE UPDATED	Monday, March 4, 2019 6:42:45 PM
	UPDATED BY	hhg
DRAFT	DATE CREATED	Tuesday, May 17, 2016 4:20:00 PM
	DATE UPDATED	Tuesday, March 5, 2019 3:27:55 PM
	UPDATED BY	hhg

SIZE	SCALE	MATERIAL	DESCRIPTION
B	1:3	SEE BILL OF MATERIALS	ASSY, GUIDE, FILM, EXIT, UPPER
3RD ANGLE	UNITS		
	INCH		
TOLERANCES		FINISH	NUMBER
X/X: ±1/32 X.XX: ±.015 X.XXX: ±.005 ANGLES: ±1°		NONE	357114

"C:\ARPAC_VAULT\Designs\350000\357000\357114.slddrw" accessed Tuesday, March 5, 2019.

SHEET 1 OF 1

ARPAC B SIZE FORMAT R4

BILL OF MATERIALS			
ITEM	QTY	NUMBER	DESCRIPTION
1	16	357109	PLT, FINGER, GUIDE, FILM, EXIT, LWR
2	30	357111	SPACER, FINGER, GUIDE, FILM
3	4	362277	SHAFT, SUPPORT, GUIDE
4	2	326316	SHAFT, MTG, FINGER, GUIDE

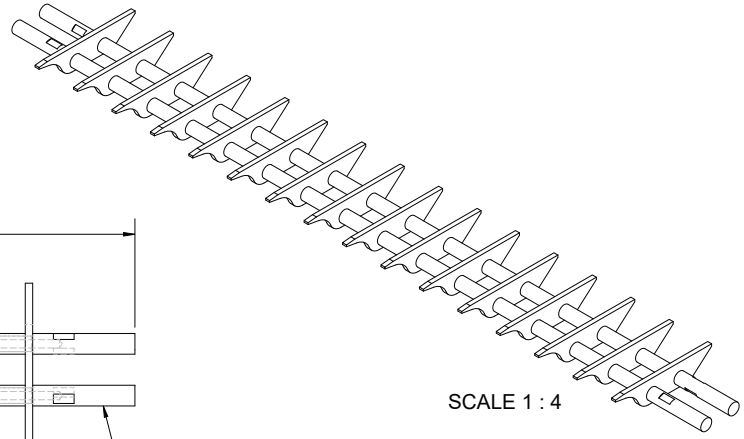

SCALE 1 : 4

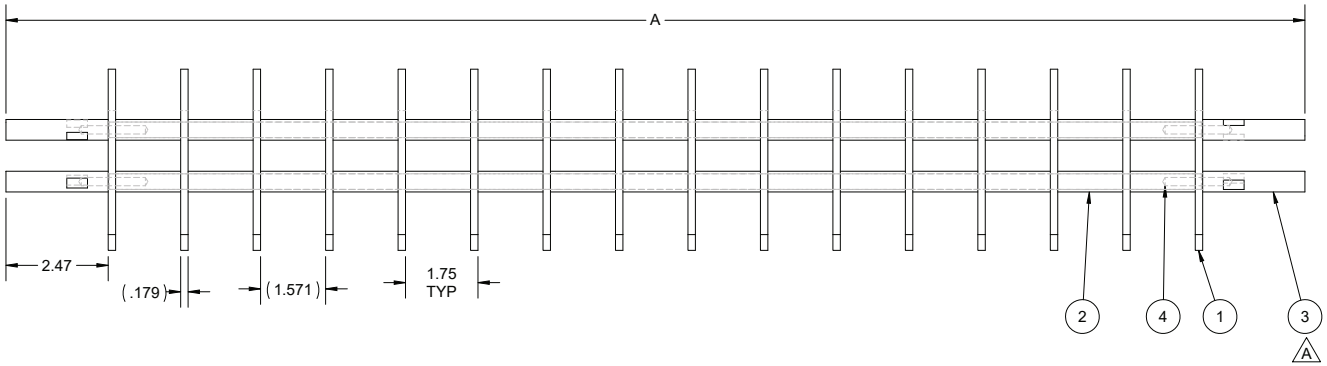

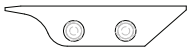

USE 1/4-20 SET SCREW TO CONNECT ITEMS 3 AND 4

PART #	A	ITEM 3	ITEM 4
357115	31.37	362277	326316
357115-001	37.37	362277-004	326316-006

REV	DATE	BY	NOTE
A	11/9/2018	SRA	ITEM 3 PART # WAS 326117

REVISIONS

NOTES
- INTERPRET PER ASME Y14.5M-1994.
- DIMENSIONS ARE IN INCHES [mm].
- DIMENSIONS IN PARENTHESES FOR REFERENCE ONLY.
- BREAK SHARP EDGES AND CORNERS.
- PROPRIETARY NOTICE: THIS INFORMATION IS THE PROPERTY OF ARPAC LLC AND SHALL NOT BE USED FOR ANY PURPOSE OTHER THAN THAT FOR WHICH IT WAS OBTAINED.
- CREATED IN SOLIDWORKS 2013.

ARPAC
9555 W. Irving Park Rd
Schiller Park, IL 60176
www.arpac.com

MODEL	FILE \ CONFIG	357115\Default
	SIMILAR TO	--
	DATE CREATED	Tuesday, May 10, 2016 10:58:17 AM
	DATE UPDATED	Tuesday, March 5, 2019 3:08:49 PM
	UPDATED BY	hhg
DRAFT	DATE CREATED	Tuesday, May 17, 2016 4:29:36 PM
	DATE UPDATED	Tuesday, March 5, 2019 3:08:50 PM
	UPDATED BY	hhg

SIZE: B
SCALE: 1:3
3RD ANGLE
UNITS: INCH
TOLERANCES
X/X: ±1/32
X.XX: ±.015
X.XXX: ±.005
ANGLES: ±1°

MATERIAL: SEE BILL OF MATERIALS
FINISH: NONE

DESCRIPTION: ASSY, GUIDE, FILM, EXIT, LOWER
NUMBER: 357115

"C:\ARPAC_VAULT\Designs\350000\357000\357115.slddrw" accessed Tuesday, March 5, 2019.

SHEET 1 OF 1

ARPAC B SIZE FORMAT R4

BILL OF MATERIALS			
ITEM	QTY	NUMBER	DESCRIPTION
1	1	357115	ASSY, GUIDE, FILM, EXIT, LOWER
2	1	357114	ASSY, GUIDE, FILM, EXIT, UPPER
3	2	326357	BLK, CLAMP, SHAFT

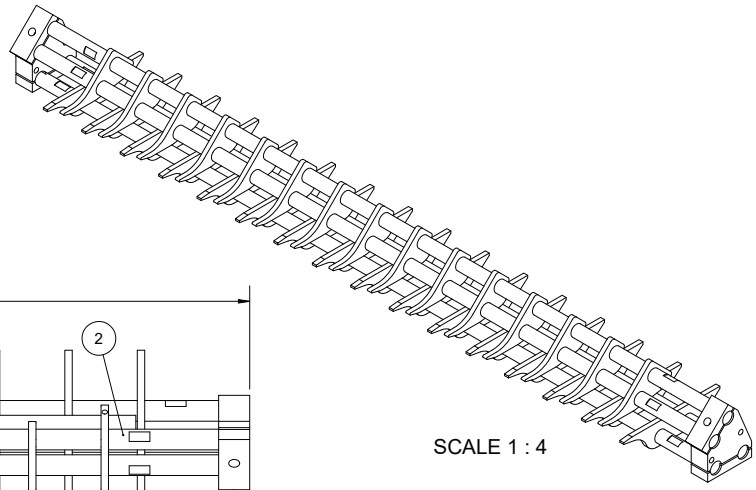

SCALE 1 : 4

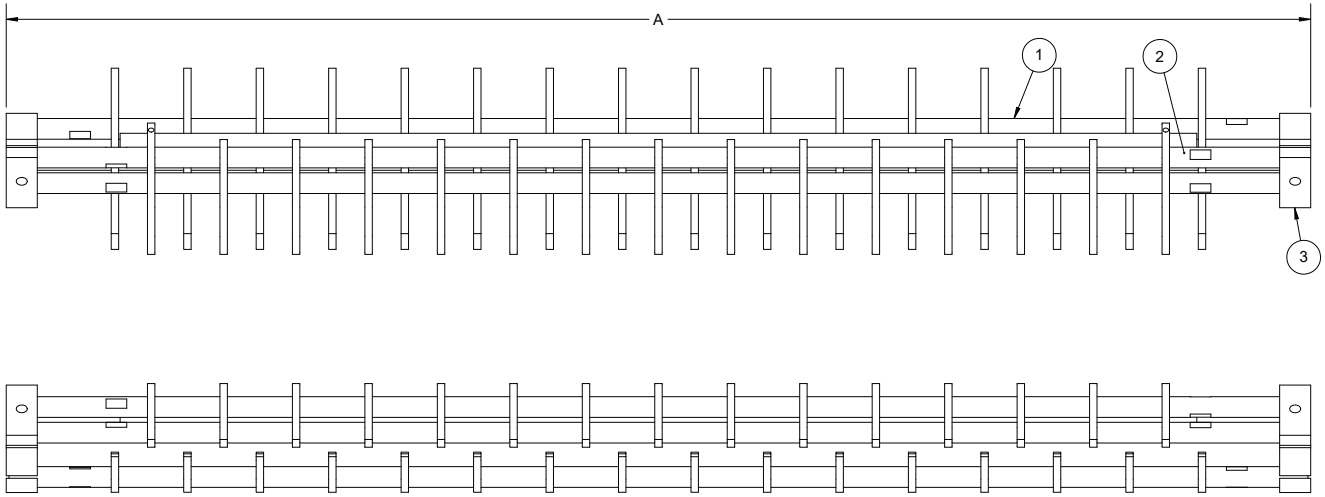

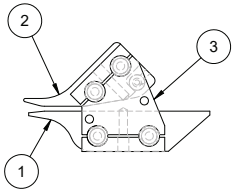

PART #	A
357116	31.50
357116-001	37.50

REV	DATE	BY	NOTE
REVISIONS			

NOTES
- INTERPRET PER ASME Y14.5M-1994.
- DIMENSIONS ARE IN INCHES [mm].
- DIMENSIONS IN PARENTHESES FOR REFERENCE ONLY.
- BREAK SHARP EDGES AND CORNERS.
- PROPRIETARY NOTICE: THIS INFORMATION IS THE PROPERTY OF ARPAC LLC AND SHALL NOT BE USED FOR ANY PURPOSE OTHER THAN THAT FOR WHICH IT WAS OBTAINED.
- CREATED IN SOLIDWORKS 2013.

ARPAC
9555 W. Irving Park Rd
Schiller Park, IL 60176
www.arpac.com

MODEL	FILE \ CONFIG	357116\357116
	SIMILAR TO	--
	DATE CREATED	Tuesday, May 17, 2016 4:40:49 PM
	DATE UPDATED	Tuesday, March 5, 2019 3:33:08 PM
	UPDATED BY	hhg
DRAFT	DATE CREATED	Tuesday, May 17, 2016 5:03:09 PM
	DATE UPDATED	Tuesday, March 5, 2019 3:33:18 PM
	UPDATED BY	hhg

SIZE	SCALE	MATERIAL	DESCRIPTION
B	1:3	SEE BILL OF MATERIALS	ASSY, GUIDE, FILM, EXIT
3RD ANGLE	UNITS		
	INCH		
TOLERANCES		FINISH	NUMBER
X/X: ±1/32 X.XX: ±.015 X.XXX: ±.005 ANGLES: ±1°		NONE	357116

"C:\ARPAC_VAULT\Designs\350000\357000\357116.slddrw" accessed Tuesday, March 5, 2019.

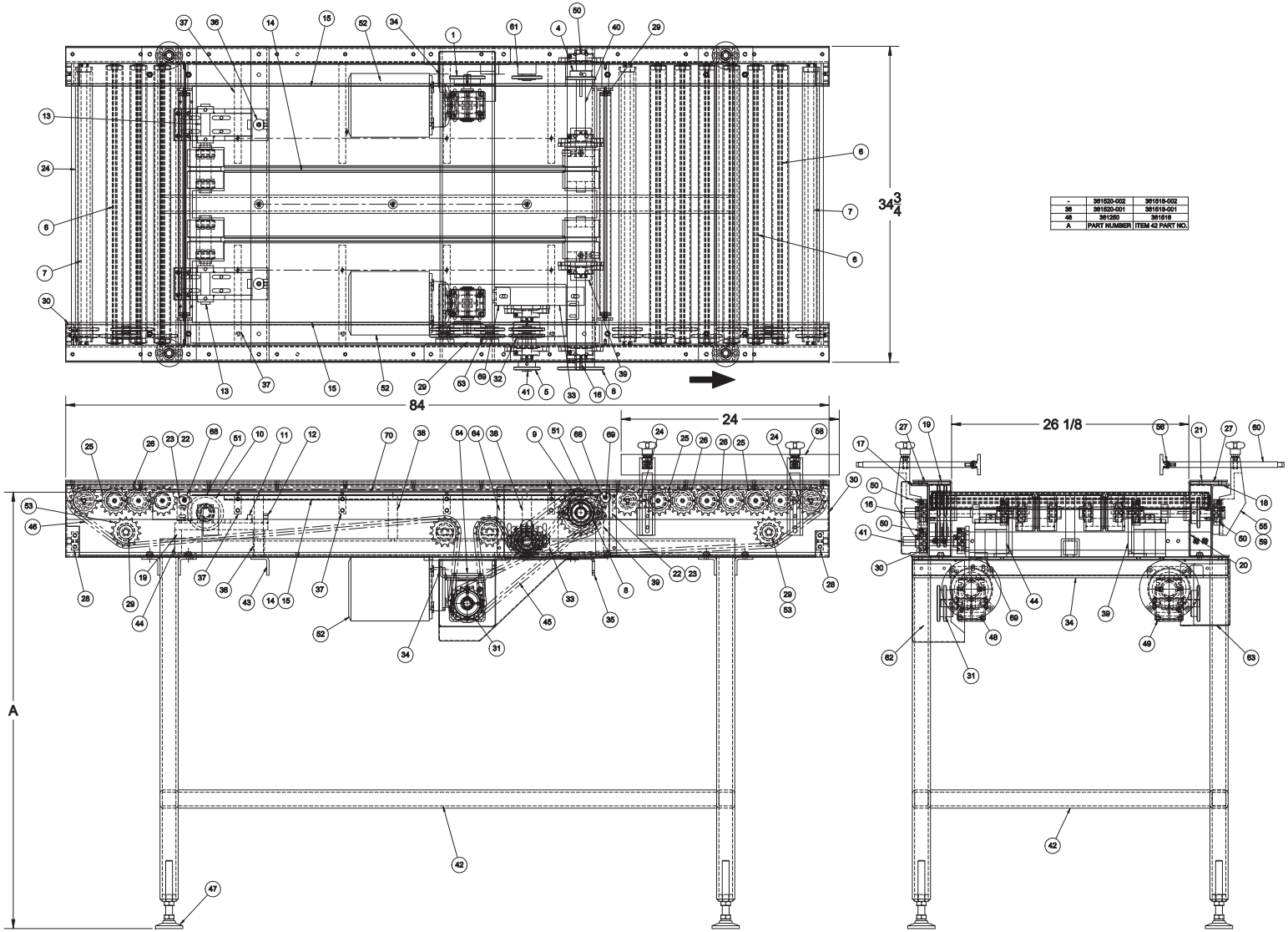

-	361520-002	361519-002
36	361520-001	361518-001
48	361260	361618
A	PART NUMBER	ITEM 42 PART NO.

ITM	QTY	PART NUM	DESCRIPTION
70	1	313625	STRIP, CHAIN SUPPORT
69	1	315840	BKT, SUPPORT, TAKE-UP
68	2	101806-154	RLR, IDL, AL, 1.250, 24.438 LG
67	2	101813-036	SHAFT, RLR, HEX, 5/16, POP-OUT, 25.625 L
66	-	-	-
65	-	-	-
64	1	234945	COVER
63	1	313631-001	WLDMT, COVER, CHAIN, LH
62	1	299994	COVER, MOTOR, TTB, W/NORD GEARBOX
61	2	101835-009	SPACER, SPKT, IDL, 1.188 LG, NO THREADS
60	4	845347	ROD, ADJ, 5/8 DIA X 12 LG, 5/16-18 TAPPED THREAD, SS, NUMBERED
59	4	807552	SPACER, 0.75 THICK, POLYAMIDE, FOR VG-210
58	2	801264-002	RAIL, GUIDE, TEE, 2.25 W, SS, 8'
57	-	-	-
56	4	807831	CLP, RAIL, SELFTIGHTENING, 5/16 STUD X 5/8 LG, SS, HEAVY DUTY
55	4	814072	BKT, RAIL, GUIDE, HEAVY DUTY, 5/8 R
54	2	306367	PLATE, NUT, MTG, MOTOR
53	9	800905	SPKT, 50BB15H, IDLER, HARDENED TEETH
52	2	827002	MOTOR, 3/4 HP, 230/460V, 60HZ, 3PH, 56C FRM, TEFV, ENERGY EFFICIENT,
51	2	803145-001	BELT, 4 x 94.75" 1 BVL, 2 FLAT, CENTER V GUIDE
50	6	827116	BRG, FLG, 1 ID, 2-BOLT, 3.89 BOLT CNTRS
49	1	846444	GEARBOX, WORM, 10:1, 56C FACE, QUILL, LH
48	1	846445	GEARBOX, WORM, 10:1, 56C FACE, QUILL, RH
47	4	827618	LEVELER, ARTICULATING, 74009 CAP, 3/4-10 STEM
46	16	800474	CHAIN, RLR, #RC50-2, DOUBLE, STAND
45	6	800468	CHAIN, RLR, #RC50
44	2	142520	WLDMT, BRKT
43	1	142517	XMBR, SPACER, TTR/TTB
42	1	361518	WLDMT, MAIN, FRAME, TTR/TTB
41	1	142513	SHAFT, JACK
40	1	142511	SHAFT, DRIVE, TTR/TTB
39	2	142510	WLDMT, SUPPORT, SHAFT, DRIVE, TTR/TTB
38	3	142509-001	ROD, AL, 1.000, TAPPED, 5/16-18 & 10-32
37	8	142508	SUPPORT, PLATFORM, TTR/TTB
36	2	142507	SPACER, TAKE-UP, TTR/TTB
35	1	142506	XBAR, SPACER, TTR/TTB
34	1	315839	WLDMT, MTG, BASE, MOTOR, DUAL, TTB
33	1	142500	WLDMT, SUPPORT, SHAFT, DRIVE, TTR/TTB
32	1	137211	SPKT, D50B18, MOD, 1.000 BORE
31	1	302845	SPKT, D50B15H, MOD, 0.75 BORE
30	4	133208	WLDMT, COVER, END, TTR
29	4	133199	SPACER, SPKT, IDLER
28	2	133185	XMBR, 3/4 x 2 W/ 3/8-16 MTG, HOLES
27	2	133184	STRIP, WEAR, TTR
26	4	132605	RLR, IDL, CRS, 1.875, W/ SPKT
25	5	132604	RLR, IDL, CRS, 1.875, W/ SPKT
24	3	132600-001	RLR, IDL, CRS, 1.875, W/ SPKTS
23	2	115514-002	WLDMT, MTG, RLR, LH
22	2	115514-001	WLDMT, MTG, RLR, RH
21	1	115429	CHANNEL, COVER, UPR, LH, TTR/TTB
20	1	115428	CHANNEL, COVER, LWR, LH, TTR/TTB
19	1	115425	CHANNEL, COVER, RH, TTR/TTB
18	1	115420	CHANNEL, FORMED, SIDE, LH, TTR/TTB
17	1	115418	CHANNEL, FORMED, SIDE, RH, TTR/TTB
16	1	115120	SHAFT, DRIVE, TTR/TTB
15	2	108318	PLT, SUPPORT, BLET, SIDE, TTB
14	1	108317	PLT, SUPPORT, BELT, CENTER, TTB
13	2	108316	SHAFT, IDL, TTB
12	2	108314	WLDMT, MTG, SHAFT, TAKE-UP, TTB
11	2	108313	WLDMT, TAKE-UP, BELT, TTB
10	2	108312	PULLEY, IDL, TTB
9	2	108311	PULLEY, DRV, TTB
8	1	102368	SPKT, 50B23, MOD, 1.000 BORE
7	3	101991-007	SHAFT, 0.625, TAPPED, 3/8-16
6	9	101811-103	SHAFT, RLR, HEX, 7/16, TAPPED, 1/4-20
5	1	101838	SPKT, 50B13, MOD, 1.000 BORE
4	1	101626	SPKT, 50B16, MOD, 1.000 BORE
3	1	-	-
2	-	-	-
1	1	849958	SPKT, 50B18, MOD, 0.75 BORE

BILL OF MATERIAL

ARPAC
9511 WEST RIVER ST.
SCHILLER PARK, IL 60176

UNLESS OTHERWISE SPECIFIED ALL DIMENSIONAL TOLERANCES:
FRACTIONS ± 1/64
TWO (2) DECIMALS ± 0.010
THREE (3) DECIMALS ± 0.005
ANGLES ± 0.5°

DRAWN:	9-27-18	BY:	MRO	SCALE: 3/16"=1"	SIZE: D
RELEASED:	9-27-18	FILENAME:	361520	APPROVED BY:	MRO

DESCRIPTION:
ASSY, TURNER, TTR/TTB, 7'

DRAWING NUMBER:
361520

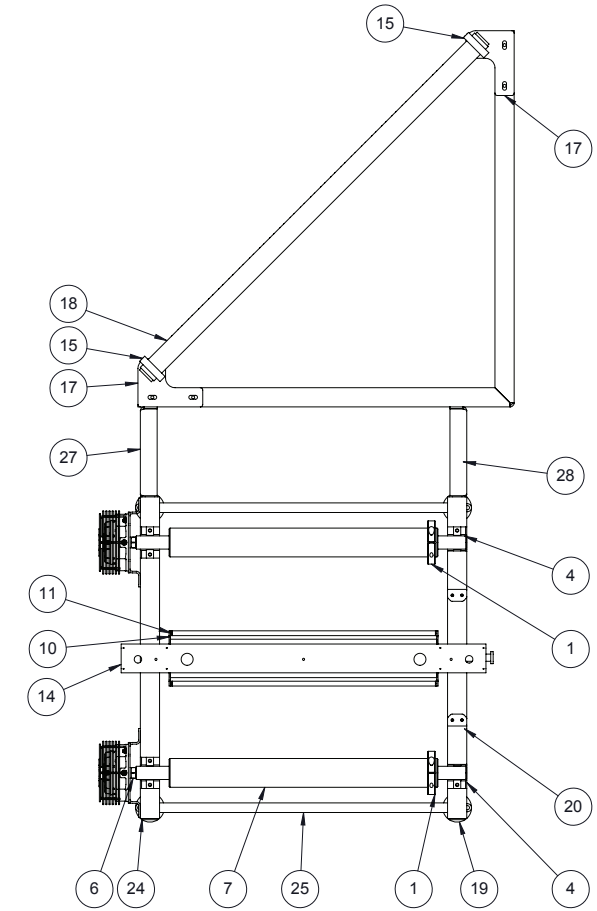

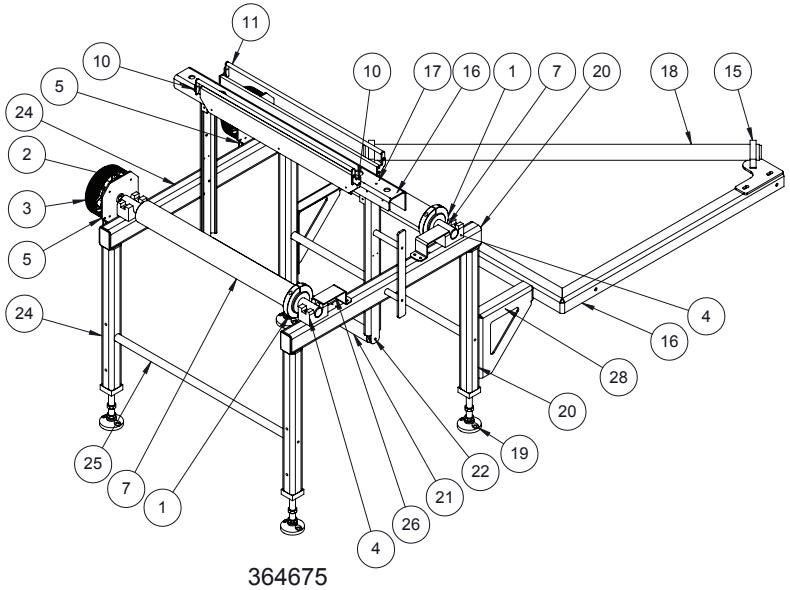

364675

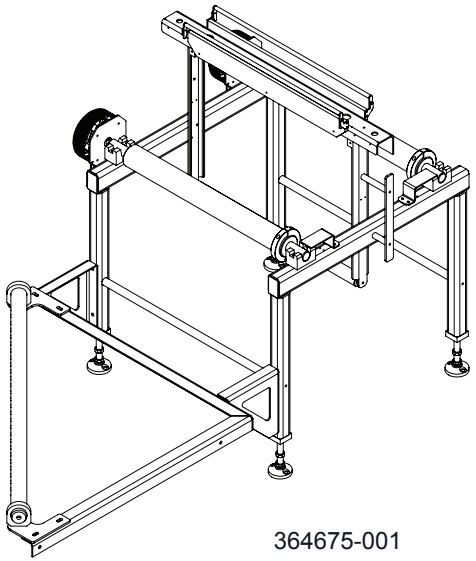

364675-001

NOTE: ITEMS 29 AND 30 NOT SHOWN

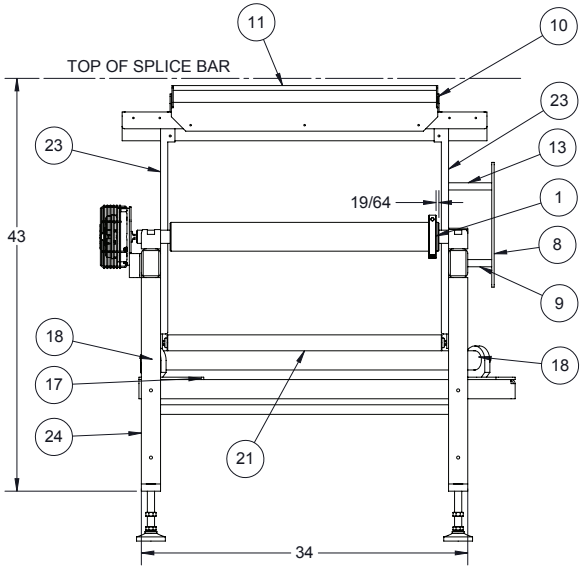

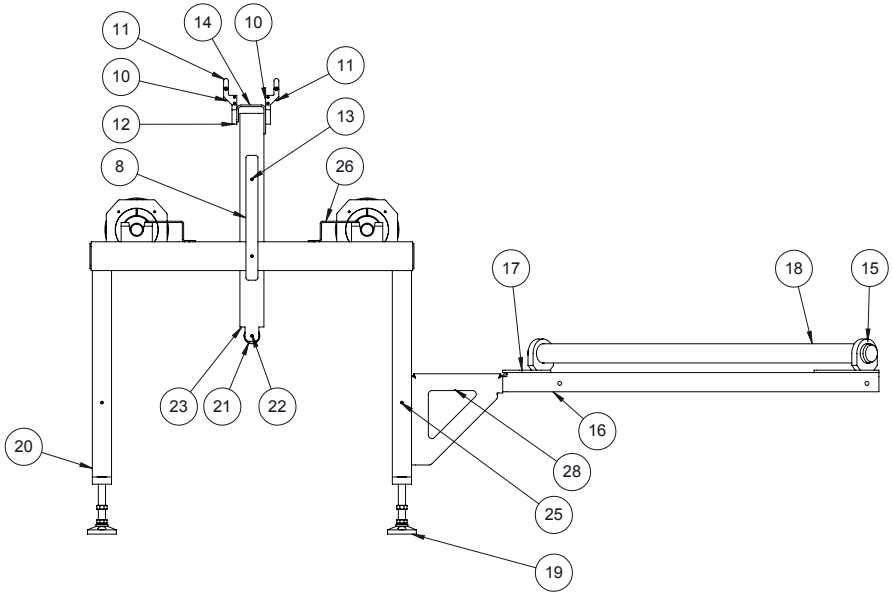

ITM	QTY	PART NUM	DESCRIPTION
28	1	364705	WLDMNT, ANGLE, MTG, 45 DEG BAR
27	1	364705-001	Default
26	2	230769	GUARD, PHOTO-EYE, RACK, FILM
25	2	118861-003	ROD, AL, 1.000, TAPPED, 1/4-20
24	1	364677	WLDMT, FRAME, SIDE, LH
23	2	203688-001	CHANNEL, MNT
22	1	101811-117	SHAFT, RLR, HEX, 7/16, TAPPED 1/4-20,29.5 L, FRAME WIDTH, SEAL WIDTH
21	1	111467-005	RLR, IDL, AL, 1.660, 28 1/2 LG
20	1	364678	WLDMT, FRAME, SIDE, RH
19	4	841410	LEVELER, ARTICULATING, 7400 # CAP, 3/4-10 STEM, 9.5 HIGH, CRS 3" BASE, 2 C'SUNK LAG HOLES, HEAVY LIP ON BASE
18	1	111487	BAR, AIR TURNING
17	2	224014	BKT, MTG, BAR, AIR
16	1	357266	ANGLE, MTG, BAR, AIR, 45 DEG
15	2	111488	COLLAR, BAR, TURNING
14	1	230538	ANGLE, MTG, BAR, SPLICE
13	1	203700	ROD, TAPPED 1/4-20
12	2	227577	PAD, CLAMP, SPLICE BAR
11	2	106883	BAR, CLAMP
10	4	106880	PIVOT, CLAMP
9	1	129243	SPACER, SUPPORT, HOSE, AIR
8	1	129242	PLT, SUPPORT, HOSE, AIR
7	2	825453	SHAFT, AIR, 3" DIA X 28" BODY X 35"LG LUG STYLE, W/AIR VALVE & AIR TOOL
6	2	111486	SHAFT, BRAKE
5	2	203690	BKT, MTG, AIR BRAKE
4	4	111483	BLK, BRG, FILM SHAFT
3	2	805989	GUARD, FINGER, CLUTCH #5450 HORTON CLUTCH
2	2	805988	BRAKE, FRICTION, AIR 1-1/8 BORE NO S450
1	2	800573	COLLAR, SHAFT, HINGED, 2-15/16 ID 4-1/2 OD X 3/4 W

BILL OF MATERIALS

ARPAC 9511 WEST RIVER ST. SCHILLER PARK, IL 60176

UNLESS OTHERWISE SPECIFIED ALL DIMENSIONAL TOLERANCES:

FRACTIONS	± 1/64
TWO (2) DECIMALS	± 0.010
THREE (3) DECIMALS	± 0.005
ANGLES	± 0.5°

DRAWN: 11/18/2019 BY: HG SCALE: 1:10 SIZE: C

FILENAME: 364675

DESCRIPTION: ASSY, RACK, FILM, BPTW

DRAWING NUMBER: 364675

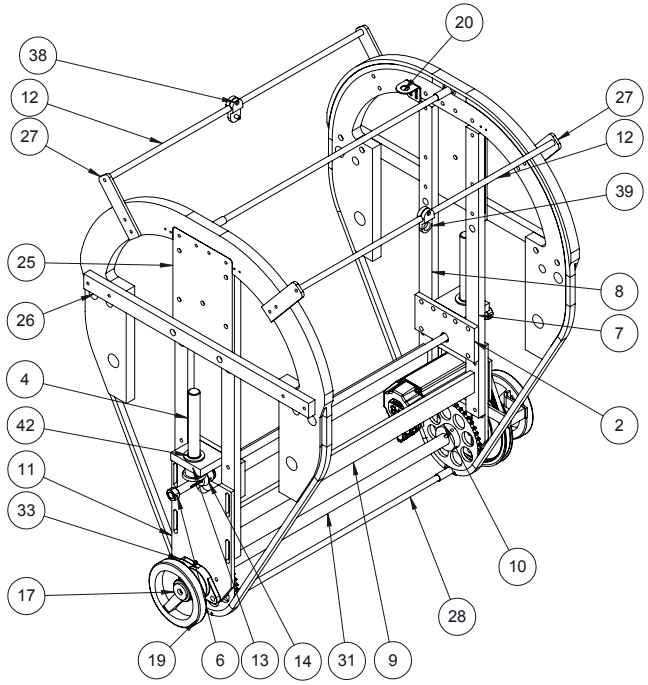

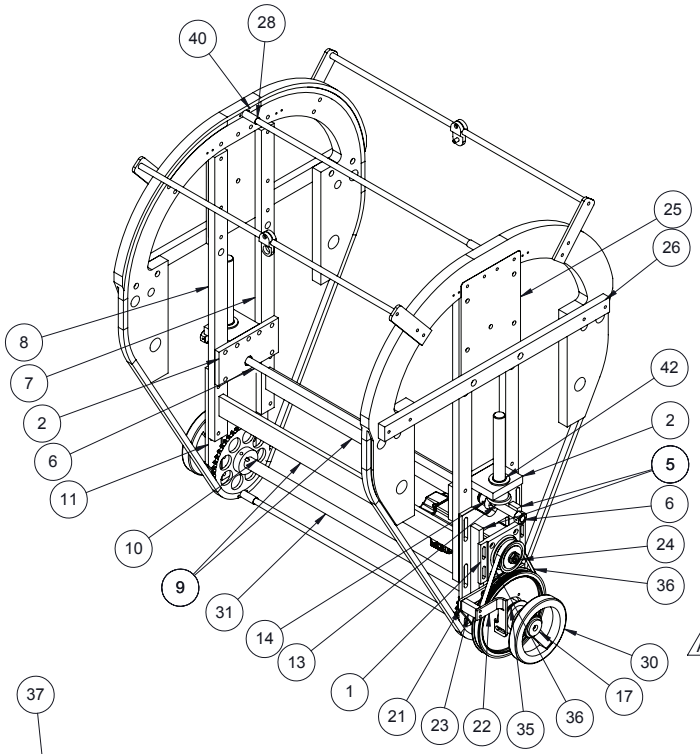

BILL OF MATERIALS			
ITEM	QTY	NUMBER	DESCRIPTION
1	1	319221	PLT, MTG, SERVOMOTOR, OVERWRAP
2	2	106751	MITER GEAR BRACKET
3	1	364685	SCREW, 1-8 RH
4	1	364686	SCREW, 1-8 LH
5	1	106754	DRIVE SHAFT MTG PLATE WELDMENT, BPTW-70
6	1	106757	SHAFT, ADJUSTABLE, A = 37.50"
7	2	106759	FLIGHT BAR FRAME R.H.
8	2	106760	FLIGHT BAR FRAME L.H.
9	2	106782	BAR, FLIGHT, CROSS MEMBER
10	2	111544	FLIGHT BAR DRIVE SPROCKET
11	1	111758	PLT, MTG, SHAFT, DRIVE
12	2	117051	DRAG STRIP MTG BAR
13	2	117310	BEVEL, GEAR, 27T, MOD
14	2	117311	GEAR, BEVEL, 18T, MOD, 5/8 BORE & KEYWAY
15	1	119483	ADAPTOR, TORQUE LIMITER
16	1	120071	SPROCKET, TORQUE LIMITER, OVERWRAP
17	2	125668-003	SPACER
18	2	126312	MTL, CURTAIN RED, 6" X 36"
19	1	138129	HANDWHEEL, MOD, AL, 2-SPOKE, 1 BORE
20	1	102675	BKT, MTG, PHOTOEYE, ADJ, VER, LG,
21	1	203746-001	PLT, MNT, PROX
22	1	203747-001	BRKT, PROX, MNT
23	1	203748-001	SPACER, PROX
24	1	231362	SPKT, DRIVE, SERVO
25	2	231384	PLT, TRACK CONN
26	2	231385	BAR, CONNECTOR, TRACK, FLIGHT BAR
27	4	364684	PLT, MTG, ROD
28	2	364687	FLIGHT BAR, OVERWRAP
29	2	364670	PROFILE, CHAIN, FLIGHT BAR TOP
30	1	364064	HANDWHEEL, MOD, AL 2 SPOKE, 0.813 BORE
31	1	364067	SHAFT, DRIVE, A = 37.625"
32	4	800523	CHN, LINK, CONN, #40, OFFSET
33	2	802760	BRG, FLG, 1.0 ID, 2-BOLT
34	1	802981	SPACER, FULL ROUND, (PURCH IN 8 FT SECT)
35	1	803970	LIMITER, TORQUE, 200-400, 13/16" BORE
36	1	806316-002	BELT, TIMING, 8MM P, 12MM W, 720MM LG,
37	1	806853	CHAIN, RLR, DBL PITCH
38	1	836993	REFLECTOR MOUNT
39	1	836994	SENSOR HOLDER, 1/2" ROD, 3/4" BORE
40	4	840749	LINK, CONN, C2040DL, .D-5, 25" DIA THRU HARD, 3/4" LG EXT
41	1	849460	MOTOR, SERVO, 37 IN-LB, 4750 RPM, 460VAC, W/BRAKE, KINETIX 5000 CONTROLLER
42	2	846213	WASHER, SHIM, .75 ID X 1.125 OD X .0625 THK, SS
43	2	809046	WSHR, OILITE, 0.752 X 1.755 X 1/8 THK

NOTE: ITEMS 18, 32, 34 NOT SHOWN

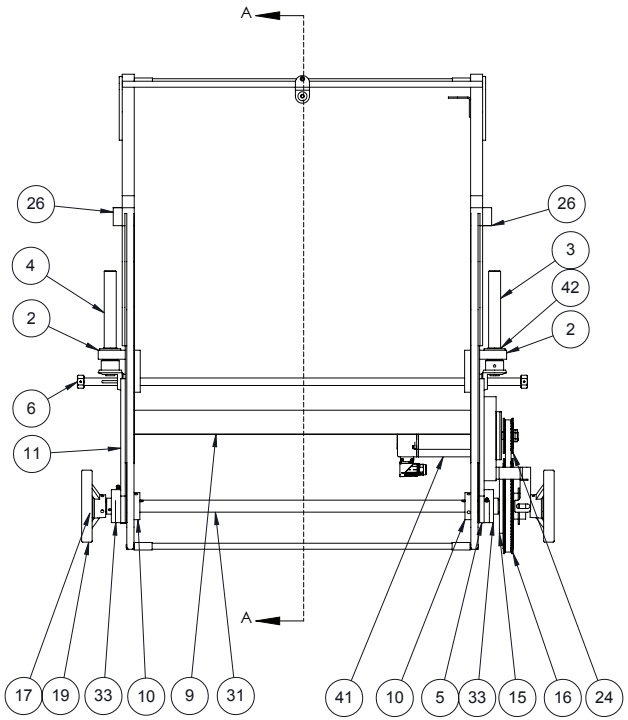

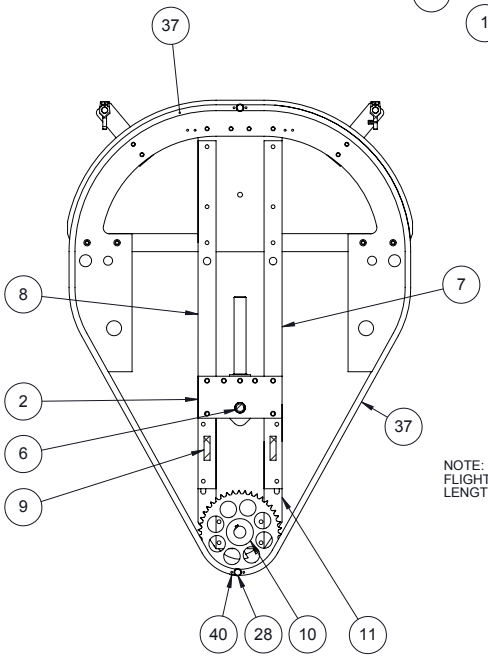

SECTION A-A

NOTE:
FLIGHT BAR CHAIN
LENGTH = 105"

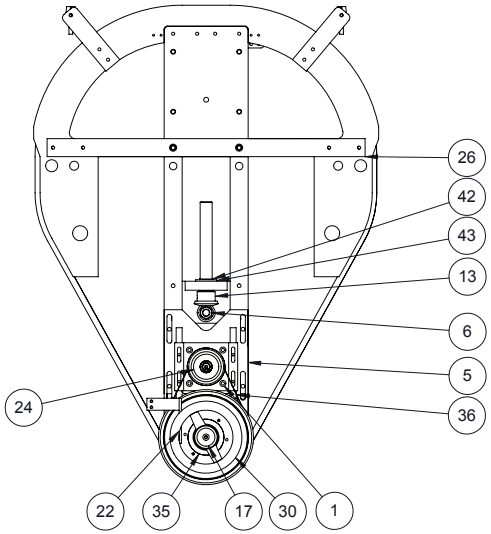

REV	DATE	BY	NOTE
A	3/2/2020	SRA	WASHER 846213 WAS COLLAR 807096

REVISIONS

NOTES
- INTERPRET PER ASME Y14.5M-1994.
- DIMENSIONS ARE IN INCHES [mm].
- DIMENSIONS IN PARENTHESES FOR REFERENCE ONLY.
- BREAK SHARP EDGES AND CORNERS.
- PROPRIETARY NOTICE: THIS INFORMATION IS THE PROPERTY OF ARPAC LLC AND SHALL NOT BE USED FOR ANY PURPOSE OTHER THAN THAT FOR WHICH IT WAS OBTAINED.
- CREATED IN SOLIDWORKS 2018.

CREATED IN SOLIDWORKS 2018

ARPAC A DURAVANT COMPANY
9555 W. Irving Park Rd.
Schiller Park, IL 60176
www.arpac.com

MODEL	
FILE \ CONFIG	364680\364680
SIMILAR TO	
DATE CREATED	Wednesday, April 17, 2013 1:24:22 AM
DATE UPDATED	Monday, March 2, 2020 9:06:24 AM
UPDATED BY	sarcher

DRAFT	
DATE CREATED	Wednesday, April 17, 2013 11:25:19 PM
DATE UPDATED	Monday, March 2, 2020 9:06:15 AM
UPDATED BY	sarcher

SIZE	SCALE
C	1:8

SRD ANGLE	UNITS
	INCH

TOLERANCES
X/X: ±1/32
X.XX: ±.015
X.XXX: ±.005
ANGLES: ±1°

MATERIAL: SEE BILL OF MATERIALS

FINISH

DESCRIPTION: ASSY, FLIGHT BAR, OVERWRAP ADJUSTABLE, A-B MOTOR W/BRAKE, FLIGHT BAR = 28.00"

NUMBER: 364680

ARPAC B SIZE FORMAT R4

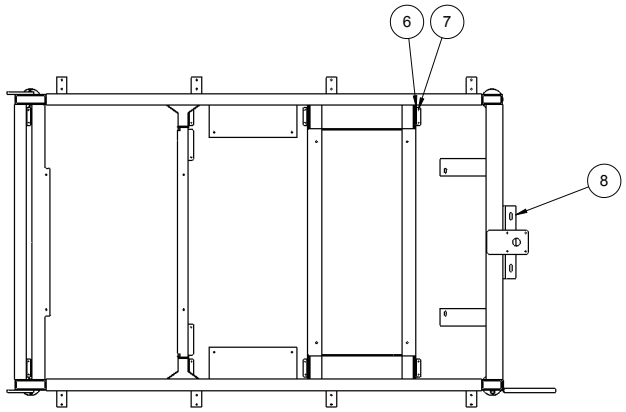

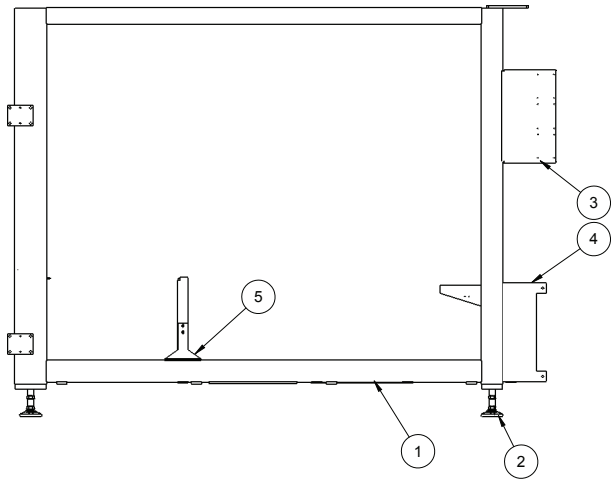

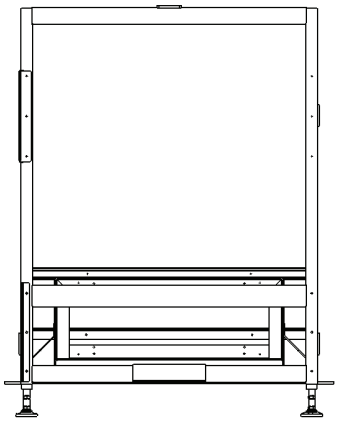

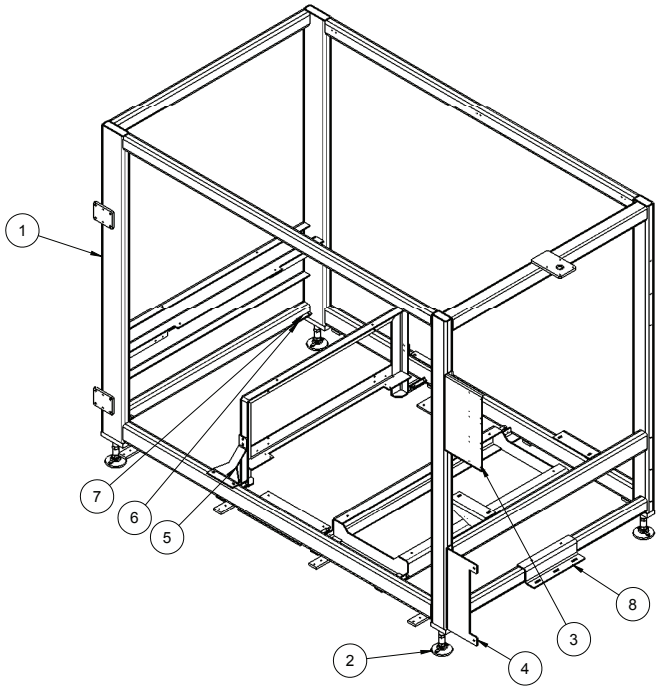

BILL OF MATERIALS			
ITEM	QTY	NUMBER	DESCRIPTION
1	1	364689	WLDMT, FRAME, BPTW
2	4	841409	LEVELER, ARTICULATING, 20000 # CAP, 1-8 STEM, 9.88 HIGH, CRS 4" BASE, 2 C'SUNK LAG HOLES, HEAVY LIP ON BASE
3	1	364326	BKT, MTG, BOX, PUSHBUTTON
4	1	368844	BKT, MTG, BOX, JUNCTION
5	2	364901	ANGLE, REINFORCEMENT
6	10	364902	ANGLE, MTG, WIREWAY
7	10	364903	PLT, CLAMP
8	1	370503	BKT, MTG, CONDUIT

REVISIONS			
REV	DATE	BY	NOTE
A	1/30/2020	SRA	ADDED BRACKET 370503

NOTES
- INTERPRET PER ASME Y14.5M-1994.
- DIMENSIONS ARE IN INCHES [mm].
- DIMENSIONS IN PARENTHESES FOR REFERENCE ONLY.
- BREAK SHARP EDGES AND CORNERS.
- PROPRIETARY NOTICE: THIS INFORMATION IS THE PROPERTY OF ARPAC LLC AND SHALL NOT BE USED FOR ANY PURPOSE OTHER THAN THAT FOR WHICH IT WAS OBTAINED.
- CREATED IN SOLIDWORKS 2013.

ARPAC
9555 W. Irving Park Rd
Schiller Park, IL 60176
www.arpac.com

MODEL	FILE \ CONFIG	364690\364690
	SIMILAR TO	--
	DATE CREATED	Tuesday, November 5, 2013 1:34:47 PM
	DATE UPDATED	Thursday, January 30, 2020 5:33:39 PM
	UPDATED BY	sarcher
DRAFT	DATE CREATED	Friday, July 22, 2016 2:33:55 PM
	DATE UPDATED	Thursday, January 30, 2020 5:36:07 PM
	UPDATED BY	sarcher

SIZE: B
SCALE: 1:24
3RD ANGLE
UNITS: INCH
TOLERANCES
X/X: ±1/32
X.XX: ±.015
X.XXX: ±.005
ANGLES: ±1°

MATERIAL: SEE BILL OF MATERIALS
FINISH: NONE
DESCRIPTION: ASSY, FRAME, BPTW
NUMBER: 364690

"C:\ARPAC_VAULT\Designs_BRANDPAC\BPTW\364690.slddrw" accessed Thursday, January 30, 2020.

ARPAC C SIZE FORMAT R4

BILL OF MATERIALS			
ITEM	QTY	NUMBER	DESCRIPTION
1	1	846561	KIT, DOOR, GUARD, W/LEXAN, AL EXTRUSION, 72 H X 93-47/64 LG, LH
2	1	846561-001	KIT, DOOR, GUARD, W/LEXAN, AL EXTRUSION, 72 H X 93-47/64 LG, RH
3	6	292478-002	BKT, MTG, ASSY, DOOR, TOP
4	1	292137-006	GUARD, END, DOORS
5	4	369962	PLT, MTG, SWITCH, DOOR
6	2	324799	BKT, MTG, PIN, SWITCH, DOOR, 4.25IN
7	1	324799-001	BKT, MTG, PIN, SWITCH, DOOR, 4.25IN
8	1	291848-001	BKT, MTG, PIN, SWITCH, DOOR, 2.5IN, LH
9	1	364701	GUARD, LEXAN, ENTRANCE, BPTW
10	1	383423	GUARD, END, DOORS, NOTCHED

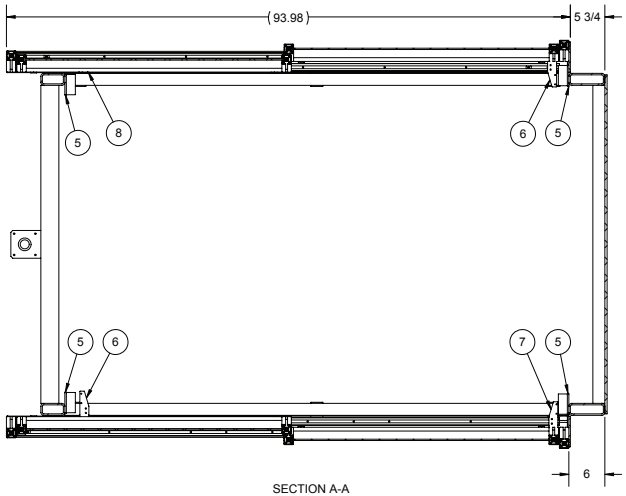

SECTION A-A

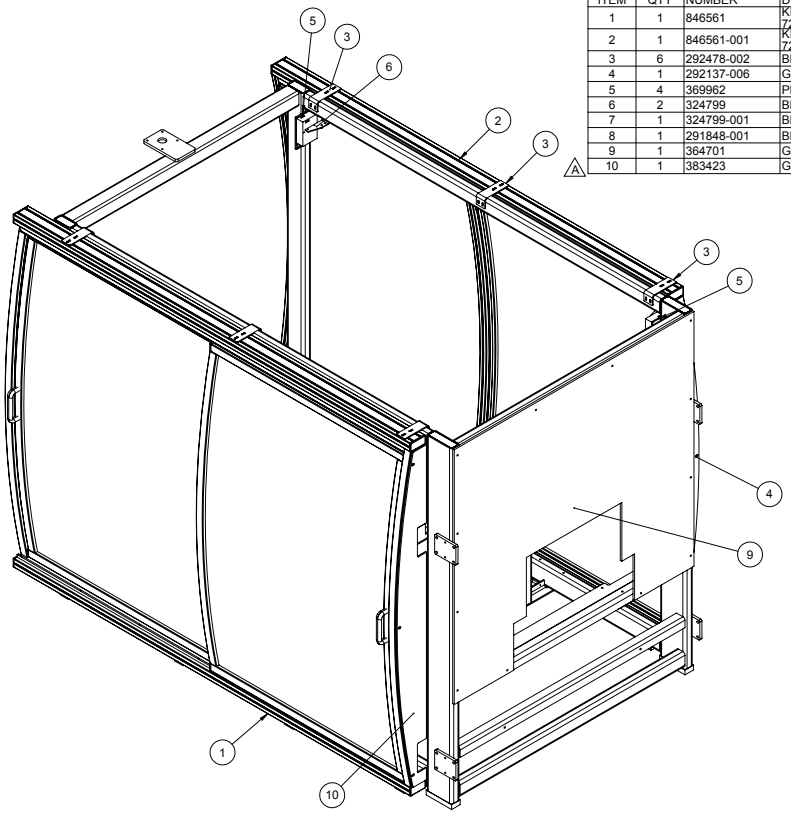

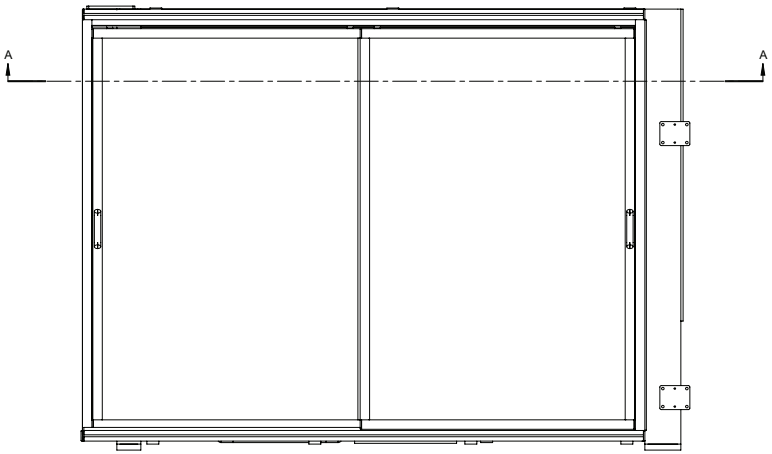

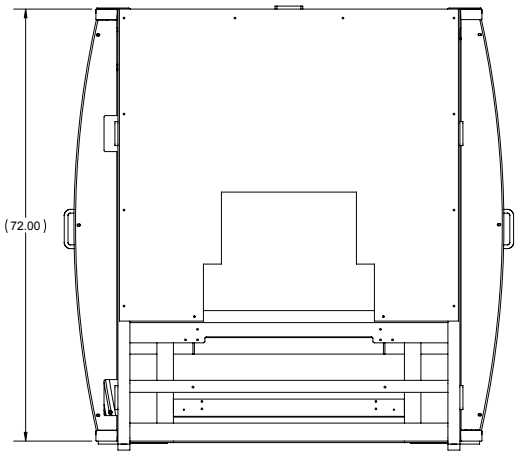

REV	DATE	BY	NOTE
A	4/1/2021	SRA	ADDED 383423

REVISIONS

NOTES
- INTERPRET PER ASME Y14.5M-1994.
- DIMENSIONS ARE IN INCHES [mm].
- DIMENSIONS IN PARENTHESES FOR REFERENCE ONLY.
- BREAK SHARP EDGES AND CORNERS.
- PROPRIETARY NOTICE: THIS INFORMATION IS THE PROPERTY OF ARPAC LLC AND SHALL NOT BE USED FOR ANY PURPOSE OTHER THAN THAT FOR WHICH IT WAS OBTAINED.
- CREATED IN SOLIDWORKS 2013.

ARPAC
9555 W. Irving Park Rd
Schiller Park, IL 60176
www.arpac.com

MODEL	FILE \ CONFIG	364700\364700
	SIMILAR TO	
	DATE CREATED	Monday, July 25, 2016 5:15:23 PM
	DATE UPDATED	Thursday, April 1, 2021 5:39:10 PM
	UPDATED BY	sarcher
DRAFT	DATE CREATED	Friday, July 29, 2016 3:40:09 PM
	DATE UPDATED	Thursday, April 1, 2021 4:58:21 PM
	UPDATED BY	sarcher

SIZE	SCALE	MATERIAL	DESCRIPTION
C	1:16	SEE BILL OF MATERIALS	ASSY, GUARD, SLIDING DOOR, BPTW-6000
3RD ANGLE	UNITS		
	INCH		
TOLERANCES		FINISH	NUMBER
X/X: ±1/32 X.XX: ±.015 X.XXX: ±.005 ANGLES: ±1°		NONE	364700

"C:\nVenia_Vault\Designs_BRANDPAC\BPTW\364700.sldprt" accessed Thursday, April 1, 2021.

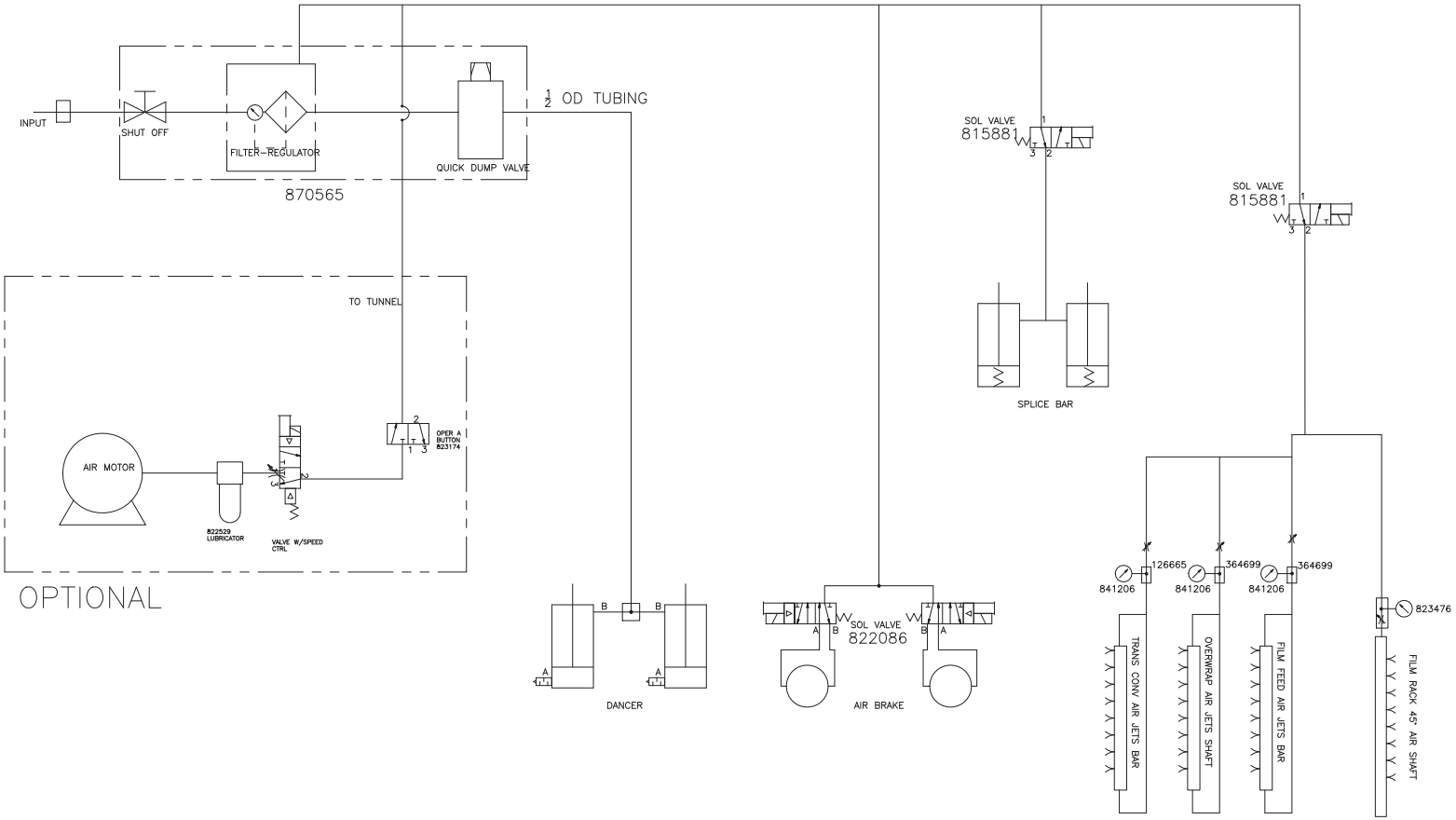

ARPAC

9511 WEST RIVER ST.
SCHILLER PARK, IL 60176

UNLESS OTHERWISE SPECIFIED ALL DIMENSIONAL TOLERANCES:		
	FRACTIONS	± 1/64
	TWO (2) DECIMALS	± 0.010
	THREE (3) DECIMALS	± 0.005
	ANGLES	± 0.5°

DRAWN: 11/18/2019	BY:	HG	SCALE:	NONE	SIZE: B
RELEASED:	FILENAME:	364706	APPROVED BY:		

DESCRIPTION: ASSY, PNEUMATIC, 24 VDC

BPTW-6000

DRAWING NUMBER: 364706

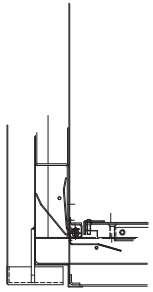

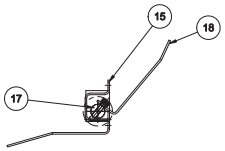

PREASSEMBLE IT.15
WITH SHAFT IT.17 AND
AIR CONTROL PLT IT.18
PRIOR TO GENERAL ASSEMBLY

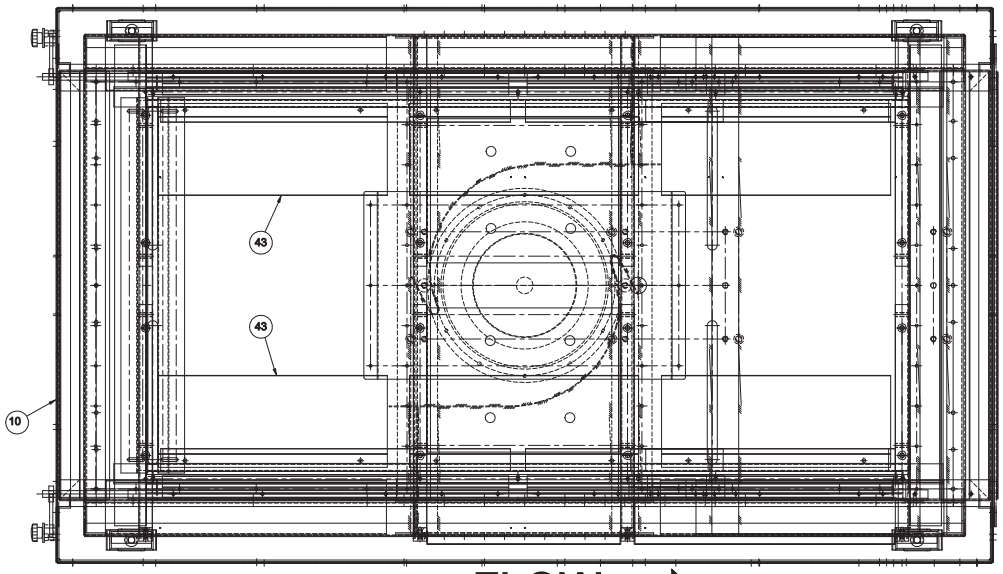

FLOW

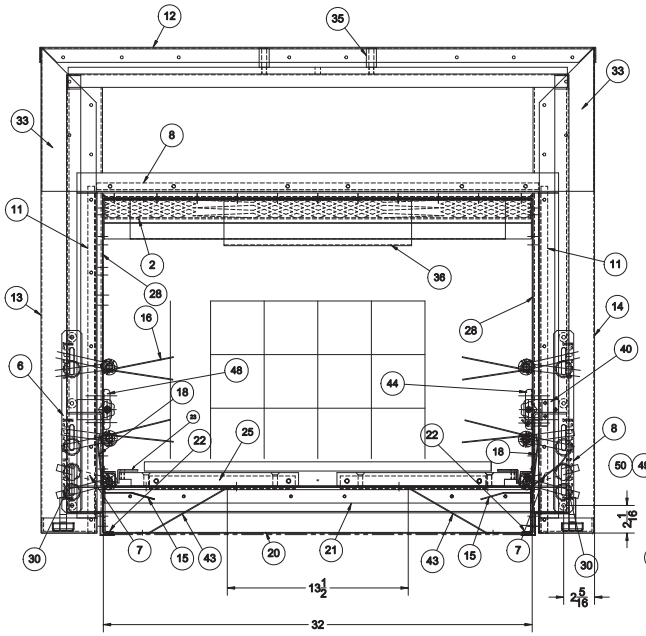

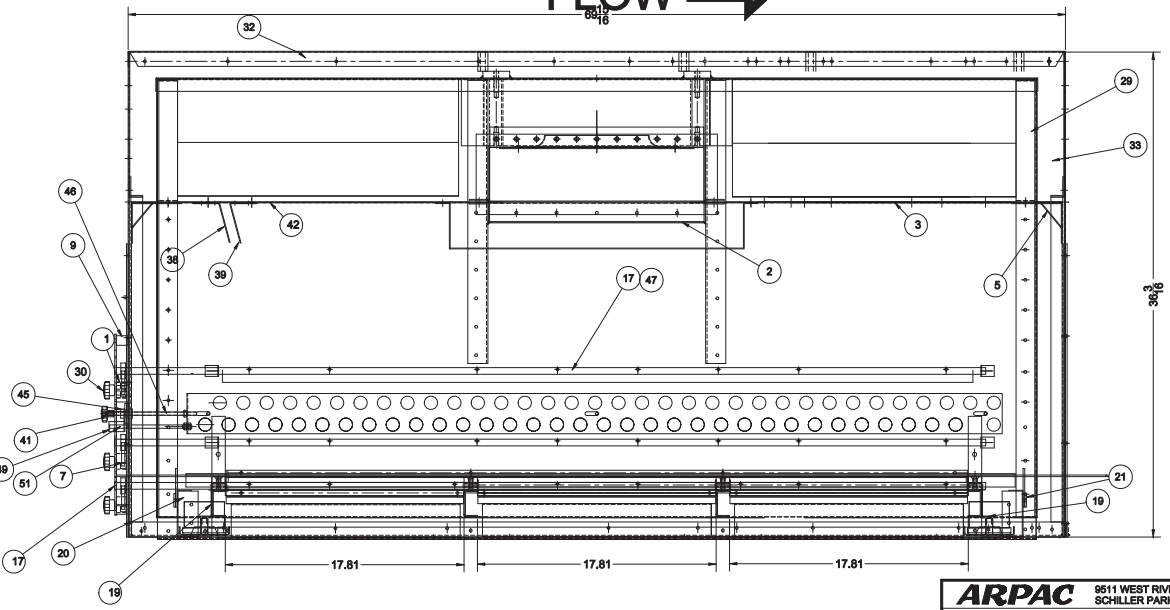

ARPAC	9511 WEST RIVER ST. SCHILLER PARK, IL 60176		
UNLESS OTHERWISE SPECIFIED ALL DIMENSIONAL TOLERANCES:	FRACTIONS ± 1/64 TWO (2) DECIMALS ± 0.010 THREE (3) DECIMALS ± 0.005 ANGLES ± 0.5°		
DRAWN: 11/26/2019	BY: SRA	SCALE: 3/16"=1"	SIZE: D
RELEASED:	FILENAME: 369684	APPROVED BY:	
DESCRIPTION: ASSY, HOUSING, OUTER, TUNNEL, 1 ZONE			
SIDE/ BOTTOM FLOW			
80 X 32 X 22		DRAWING NUMBER: 369684	

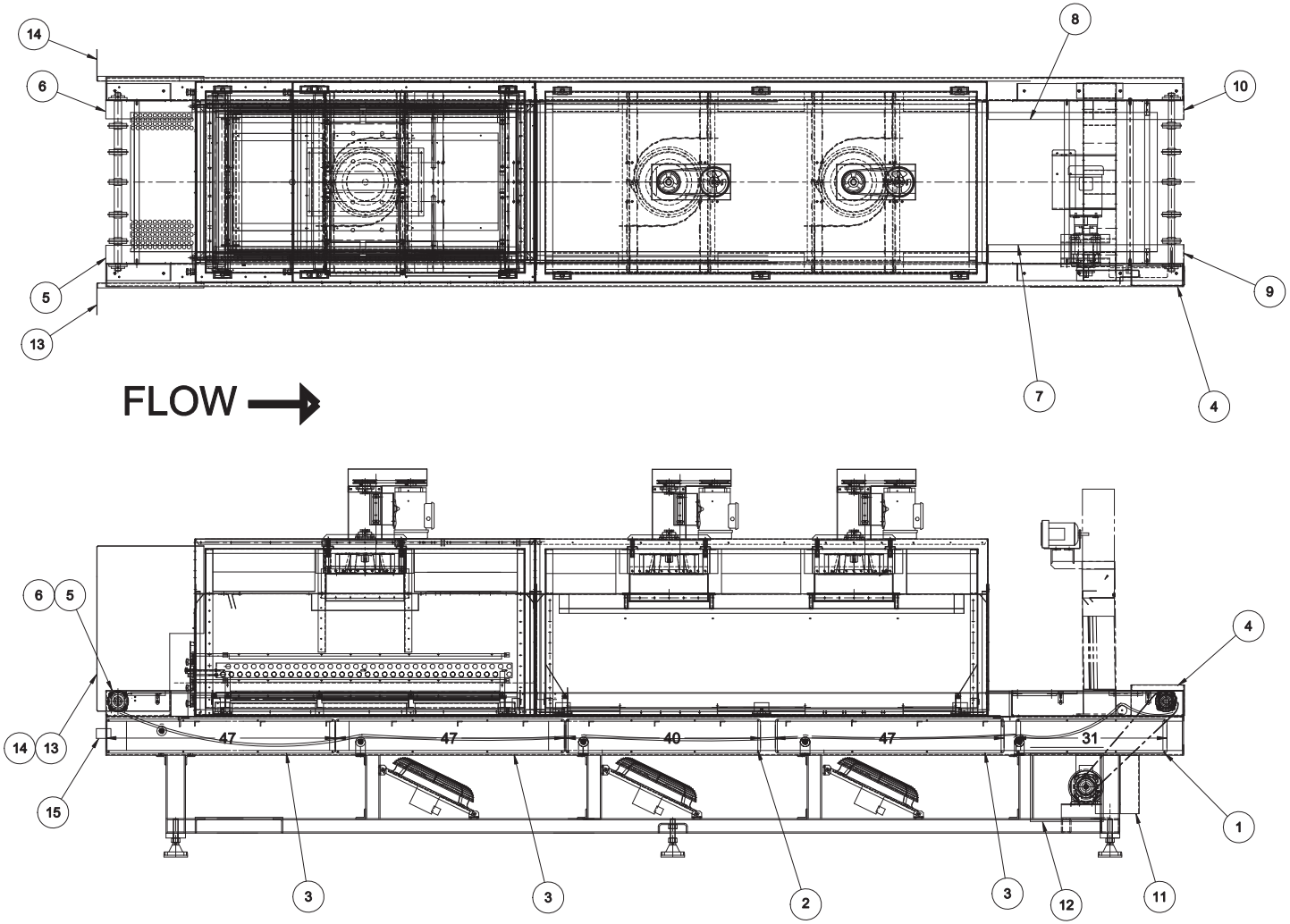

NOTE: ITEM 16 NOT SHOWN

ARPAC	9511 WEST RIVER ST. SCHILLER PARK, IL 60176		
UNLESS OTHERWISE SPECIFIED ALL DIMENSIONAL TOLERANCES:	FRACTIONS ± 1/64 TWO (2) DECIMALS ± 0.010 THREE (3) DECIMALS ± 0.005 ANGLES ± 0.5°		
DRAWN: 1/22/2021	BY: SRA	SCALE: 3/32"=1"	SIZE: D
RELEASED:	FILENAME: 382286	APPROVED BY:	
DESCRIPTION: ASSY, GUARDS, TUNNEL, 3- ZONE			
		DRAWING NUMBER: 382286	

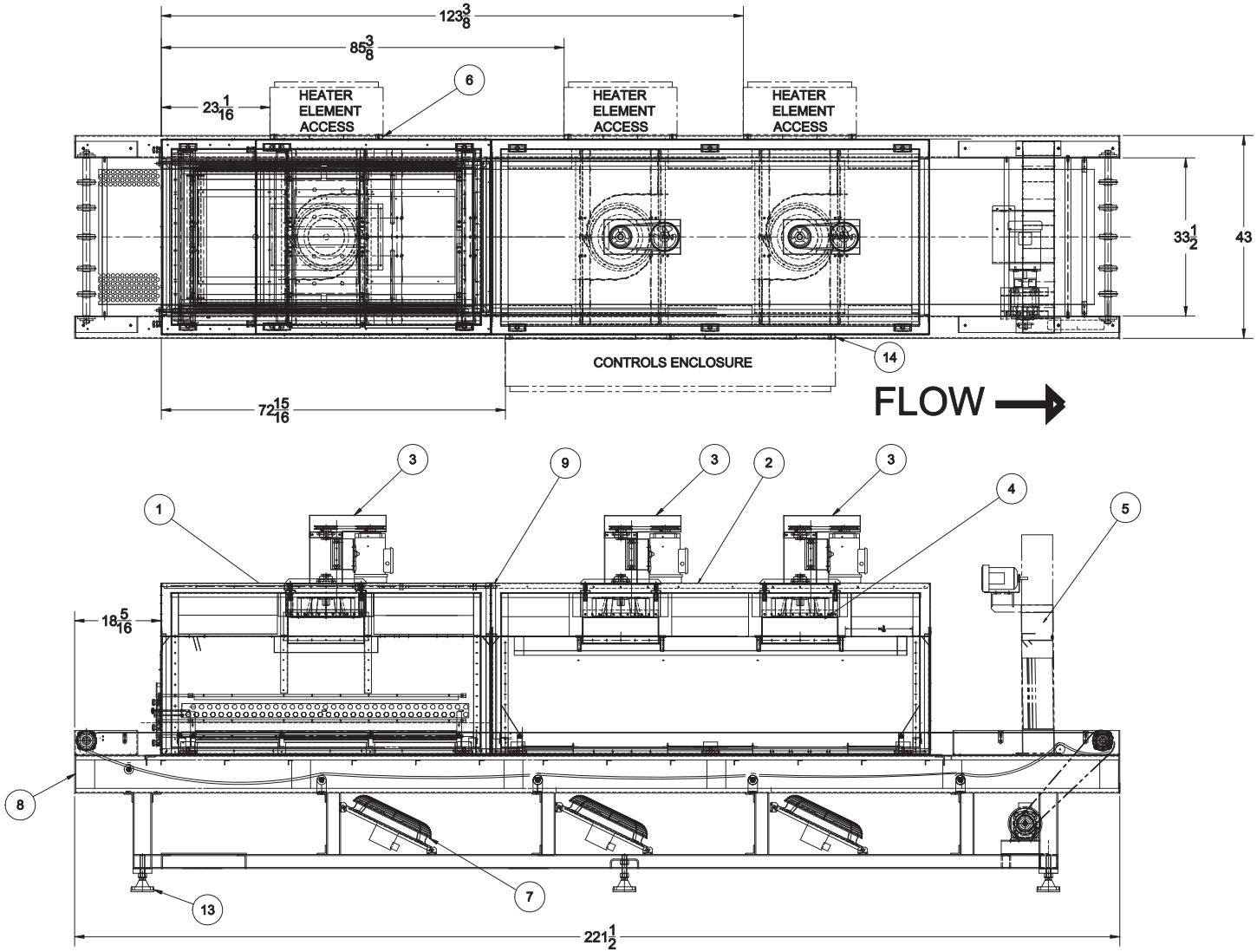

NOTE: ITEMS 10, 11, 12 NOT SHOWN

REFER TO THE SALES LAYOUT FOR HEATER ACCESS AND ELECTRICAL ENCLOSURE SIDES

ARPAC	9511 WEST RIVER ST. SCHILLER PARK, IL 60176		
UNLESS OTHERWISE SPECIFIED ALL DIMENSIONAL TOLERANCES:	FRACTIONS ± 1/64 TWO (2) DECIMALS ± 0.010 THREE (3) DECIMALS ± 0.005 ANGLES ± 0.5°		
DRAWN: 1/22/2021	BY: SRA	SCALE: 3/32"=1"	SIZE: D
RELEASED:	FILENAME: 382287	APPROVED BY:	
DESCRIPTION: ASSY, TUNNEL, BOT AIR FLOW, 3 ZONE, UNI BELT			
32" WIDE, BPTW			
CONTROLS ENCLOSURE ATTACHED		DRAWING NUMBER: 382287	